MPEG-21 in broadcasting: the novel digital broadcast item model

Artur Lugmayr[a], Abdellatif Benjelloun Touimi[b], Itaru Kaneko[c], Jong-Nam Kim[d],
Claudio Alberti[e], Sadigurschi Yona[f], Jaejoon Kim[g], Maria Teresa Andrade[h] and Seppo Kalli[a]
[a]Digital Media Institute, POB. 553, FIN-33101 Tampere, Finland
[b]France Telecom R&D, 2 avenue Pierre Marzin - 22307 Lannion, France
[c]Advanced Research Institute for Science and Engineering/RISE/Waseda University, Japan
[d]Korean Broadcasting System (KBS), Korea
[e]Swiss Federal Institute of Technology, Signal Processing Institute (ITS),
EPFL-ITS-LTS3 CH-1015 Lausanne, Switzerland
[f]NDS Technologies, Israel
[g]Daegu University, Korea
[h]INESC, Portugal

ABSTRACT

The MPEG experts are currently developing the MPEG-21 set of standards and this includes a framework and specifications for digital rights management (DRM), delivery of quality of services (QoS) over heterogeneous networks and terminals, packaging of multimedia content and other things essential for the infrastructural aspects of multimedia content distribution. Considerable research effort is being applied to these new developments and the capabilities of MPEG-21 technologies to address specific application areas are being investigated. One such application area is broadcasting, in particular the development of digital TV and its services. In more practical terms, digital TV addresses networking, events, channels, services, programs, signaling, encoding, bandwidth, conditional access, subscription, advertisements and interactivity. MPEG-21 provides an excellent framework of standards to be applied in digital TV applications. Within the scope of this research work we describe a new model based on MPEG-21 and its relevance to digital TV: the digital broadcast item model (DBIM). The goal of the DBIM is to elaborate the potential of MPEG-21 for digital TV applications. Within this paper we focus on a general description of the DBIM, quality of service (QoS) management and metadata filtering, digital rights management and also present use-cases and scenarios where the DBIM's role is explored in detail.

Keywords: MPEG-21, broadcasting, digital television, metadata, XML

1. INTRODUCTION

MPEG-21 – Multimedia Framework is adopting a global approach for multimedia environment (Ref. [1]). It is providing the complementary tools for the existing MPEG-1/2/4 and 7 that allow a transparent use of multimedia content through the distribution value chain of content - from creation to consumption by end-user. Digital, Interactive TV (iTV or digital TV) is another new paradigm in multimedia and deals with the digitalization of the value chain of broadcasting. Features such as application environments, Internet access, higher video quality, cost efficient production, more interactivity enhance the television experience tremendously. Many country dependent standardization efforts exist to define these advanced features. MPEG delivered with MPEG-2 the basic broadcasting technology for audio, video and data. It is common in several different broadcasting standards defined by the Digital Video Broadcasting (DVB), Advanced Television Systems Committee (ATSC), Digital Audio Visual Council (DAVIC) or Integrated Services Digital Broadcasting (ISDB). Several standards aim at the convergence of multimedia home services with the broadcasting environment. MPEG-21 provides an excellent framework to enhance the digital TV experience tremendously with its capabilities. Especially the convergence between MPEG-21 and broadcasting is researched within the MPEG ad-hoc

LA: lartur@acm.org; phone: +358 40 821 0558; fax: +358 (3) 3115 3087; ABT: abdellatif.benjellountouimi@ieee.org; phone: +33 2 96 05 36 77; fax: +33 2 96 05 35 30; CA: Claudio.alberti@epfl.ch; phone: +41 21 693 69 79; fax: +41 21 693 46 63; http://lts3www.epfl.ch; SY: Ysadigurschi@ndsisrael.com; IK: itaru-k@acm.org ; JNK: jnkim@kbs.co.kr; JK: jjkimisu@daegu.ac.kr; MTA: mandrade@inescporto.pt; SK: seppo.kalli@tut.fi

group “MPEG-21 in Broadcasting”. The goal of the ad-hoc group is to “study of potentials, benefits and possibilities of MPEG-21 in the context of broadcasting and clarification of the standardization requirements”. MPEG-21 defines two basic concepts for the environment of multimedia exchange:

- The **User** is defined as any content manipulator (producer, provider, network peer, end-user…)
- The **Digital Item (DI)** corresponds to a combination of multimedia resources given in MPEG-1, 2, 4 representations or any other formats; associated with Metadata as defined in MPEG-7 and a structure expressing the relation between them and given in the *Digital Item Declaration (DID)* (see figure 1).

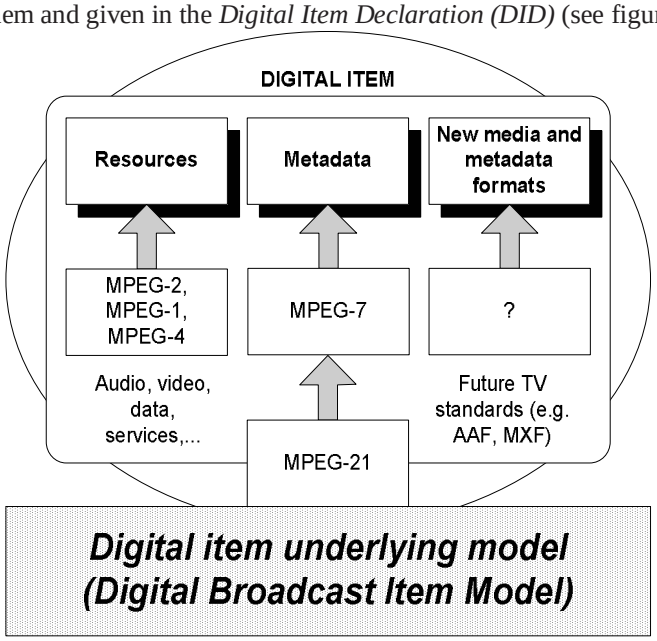

Figure 1. Structure of a Digital Item

MPEG-21 standard is getting developed mainly around the following goals and concepts:

- **"Multimedia Content Structuring":** this is given by the "Part 2 - Digital Item Declaration (DID)" (Ref. [9]) which defines a generic format to convey all the MPEG-21 related descriptions on the content. The "Part10 – Digital Item Processing (DIP)" (Ref. [15]) makes the DI an interactive object by defining and carrying the methods and operations that can be applicable.
- **"Universal Multimedia Access (UMA)"** (Ref. [2, 6, 7]**):** This concept is mainly concretized by the tools developed in the "Part 7 - Digital Item Adaptation (DIA)" (Ref. [14]) allowing the adaptation of content to heterogeneous networks and terminals constraints. The new project on "Part 13 – Scalable Video Coding" (Ref. [18]) will provide a high flexible scalable video formats allowing such adaptation possible and optimal. The framework of the "Part 12 - Multimedia Test Bed Resource Delivery" (Ref. [17]) will gives a practical illustration of the use of those tools by setting up a test plat-form of scalable media streaming over IP networks. Finally, the currently new work on "Multimedia Middleware (M3W)", in its first thoughts, will enhance the UMA concept by shielding multimedia applications from implementation context both operating system and hardware.
- **"Digital Rights Management (DRM)"**: the development around this axe is given by the definition of identification framework in "Part 3 – Digital Item Identification" (Ref. [10]), the rights expression language (Part 6 – REL) and its corresponding dictionary (Part 5 – RDD) (Ref. [12]). The "Part 4 – Intellectual Property Management and Protection (IPMP)" (Ref. [11]) which is in its early stage has as goal the specification of a DRM architecture allowing an interoperable interconnection between the different parts of MPEG-21. One of its major goals is also to set interoperability basis between different DRM systems both defined inside MPEG (MPEG-2 CA, MPEG-2/4 IPMPX) or outside.

Other parts are related to the definition of the MP21 File Format (part 9) for carrying the DI, Persistent Association Evaluation Tools (parts 11) defining and giving a technical report on methodologies of assessing multimedia watermarking related technologies. An excellent starting point for the exploration of the achievements and goals of MPEG-21 can be found in Ref. [5].

A typical digital TV value chain consists of several parties. Content creation is done in the phases preproduction, production and postproduction. Specific service editors contribute with designing specific services such as web-front-ends or similar. Service providers offer services that are deployed in combination with broadcast content (e.g. advertisements including hyperlinks to a specific service provider). Users interact with service providers as well as broadcasters via interaction service providers. . These are the entities offering typical Internet access. The goal is the introduction of a digital item for broadcasting – a *Digital Broadcast Item (DBI)* with its underlying model applied in broadcasting. This model is called *Digital Broadcast Item Model (DBIM).*

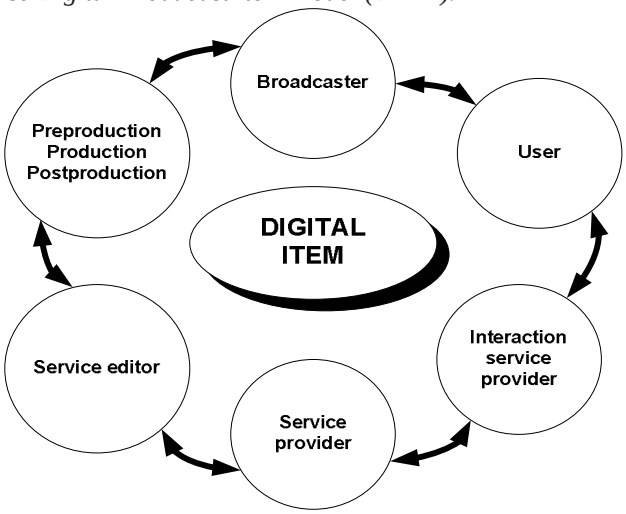

Figure 2. Digital, Interactive TV value chain

1.1. Overview of this research work

Within the scope of this research work we provide a comprehensive overview of work done within ISO/IEC JTC 1/SC 29/WG 11. A newly established ad-hoc group "MPEG-21 in Broadcasting" researches issues how MPEG-21 can be utilized in combination with digital broadcasting. We provide insights about our current research works:

- **Intellectual Property Management and Protection (IPMP):** Content has value for authors and distributors and revenue models are directly assigned to content consumption by arbitrary models: pay-per-view, pay-per-megabyte among many others. IPMP focuses on multi-channel applications as well as content protection models to maintain intellectual property rights. This use-scenario introduces current efforts within MPEG focusing on IPMP scenarios especially in broadcasting;
- **Quality of Service (QoS) Management:** Content formats and its characteristics need to be matched to the available technical resources of the elements of the distribution value chain such as network bandwidth or consumer terminal capabilities. However, the consumer should still perceives content at an adequate quality. An intelligent method consists of monitoring, controlling and reinforcing QoS measurements throughout all the broadcasting chain. The use case scenario introduces such concepts in close relationship with the existing tools in MPEG-21 and with the aim of providing the best possible quality for consumers;
- **Metadata Filtering:** There are many different metadata formats and data to be collected throughout the broadcast value chain. Data should be extracted semi-automatically for standard services such as electronic program guides or simple service information. This use-scenario devotes to filtering and transcoding metadata to other formats. Data should be preserved throughout the broadcast value-chain;
- **Digital Broadcast Item Model (DBIM):** The principle of MPEG-21 is the definition of a model underlying the digital item declaration. The DBIM represents this model especially for broadcast use. The DBIM shall unify several aspects of the use of MPEG-21 in broadcasting (e.g. adaptation, QoS, IPMP);

2. RELATED WORK

The *TV-Anytime Forum* (Ref. [23]) was founded in 1999 and devotes its efforts in the definition of public standards in the distribution and consumption phase of broadcasting. It especially adds persistent storage functionality to consumer

devices, as well as rights management mechanisms. The *Society of Motion Picture Television Engineers (SMPTE)* (Ref. [22]) is highly focused on professional broadcast related standards. SMPTE's efforts resulted into many broadcasting standards, but within the scope of this paper the *Material eXchange Format (MXF)* (Ref. [19]), the *General eXchange Format (GXF)* (Ref. [22]) and the *SMPTE Metadata Dictionary* (Ref. [22]) of relevance. GXF rigidly annotates metadata by describing the content of a byte stream. The byte stream is transmitted via an extended version of FTP as transmission protocol. MXF is a more sophisticated solution for metadata in broadcasting and is pushed by the *Professional MPEG Forum (Pro-MPEG)* (www.pro-mpeg.org). MXF represents a file format valid throughout creation processes that contains files, streams, metadata annotations and services. The SMPTE Metadata Dictionary is simply a dictionary of metadata structures valid in broadcasting. The *Advanced Authoring Format (AAF)* (Ref. [21]) is also a valid exchange format for exchange of content and metadata during content creation. It is mostly applied in post-production to exchange and edit materials. The *European Broadcasting Union (EBU)* (www.ebu.ch) defines P/META metadata exchange schemes for interchange of content between several partners in the broadcast chain. The IEEE 1484.12.1 LOM data model standard devotes its efforts to define a unified framework for eLearning purposes. It represents a more practical approach towards packaging of content and metadata in the context of eLearning.

3. MPEG-21 Overview

This section gives an overview of MPEG-21 including abstract terms, concepts and major part of MPEG-21.

3.1. DI Fundamental unit of content in MPEG-21

Digital Item (DI) is one of the fundamental concepts in MPEG-21. A DI is the fundamental unit of multimedia information for distribution and transactions and it can be composed of several parts including a standard representation and identification and metadata such as MPEG-7 descriptions. A DI is therefore an ensemble of media resources associated to certain content and bound to relevant descriptors. For example a group of resources related with a video clip: an MPEG-2 video file, an MP3 audio file, MPEG-7 descriptions, IPMP information, a low-resolution version of the video in MPEG-4, a set of JPEG images of the leading singer, etc. and a correspondent DID.

In the case of broadcasting services, a DI may be the broadcasting program, or a smaller unit of multimedia content distributed by the broadcasting service. Various specifications, descriptors, useful models are defined in MPEG-21 upon the concept of a DI. In practice, a DI is a combination of resources, metadata, and structure. The resources are the individual assets or (distributed) content. The metadata describes (distributed) data about or pertaining to the DI as a whole or also to the individual resources in the DI. Finally, the structure relates to the relationships among the parts of the DI, both resources and metadata.

3.2. DID and DII – The basic structure of DI

ISO/IEC 21000-2 Digital Item Declaration (DID) and ISO/IEC 21000-3 Digital Item Identifier (DII) define the structure of the DI. The DID is based on XML and it provides a model comprising a set of abstract terms and concepts to define the structure and organization of DIs. The model constitutes the foundation to build higher-level functionality such as identification, description, handling, monitoring, adaptation and usage of the DI. The DID may include a DII, which is a unique identifier for the DI, REL and RDD, which are expressions on rights and permissions, and other generic metadata describing the DI. The DID also contains references to the Resources, which are the actual multimedia assets included in the DI and typical examples of resources are AAC audio files, MPEG-2 video clips, JPEG images, MPEG-4 presentations, HTML pages.

3.3. REL and RDD – Expression of rights and /or usage conditions

ISO/IEC 21000-5 Rights Expression Language (REL) and ISO/IEC 21000-6 Rights Data Dictionary (RDD) describe the rights permissions and usage conditions associate with a DI. REL can describe that information with declarative expression using the terms as defined in the RDD. In the case of a broadcasting service, the provider of the movie content for an example may use the REL to express the conditions under which the User shall be able to watch the movie.

3.4. IPMP – Tool to ease interoperability between different systems

IPMP is a common element of MPEG-2 and MPEG-4 and is planned to be a part of MPEG-21. In brief, IPMP defines descriptors designed to ease the interoperability between the different DRM systems, especially in terms of bridging different security systems. While REL provides standardized form of the rights, permissions or usage conditions of the content, actual enforcement of the condition is supported by the IPMP. MPEG is currently working on drafting ISO/IEC 21000-4 Intellectual Property Management and Protection (IPMP).

3.5. DIA – Adaptation

ISO/IEC 21000-7 Digital Item Adaptation (DIA) defines tools to allow the adaptation of DIs. Several types of adaptation tools were identified for standardization and development within the DIA, such as those to specify User Characteristics, Terminal Capabilities, Networks Characteristics, Natural Environment Characteristics, Resource Adaptability and Session Mobility. The Digital Adaptation tools comprise a description adaptation engine and a resource adaptation engine. These are to be applied to the DI in order to seamlessly produce the Adapted Digital Item. The DIA provides descriptors to utilize Resource adaptation, e.g. DIA AdaptationQoS Descriptor and DIA Bitstream Syntax Description. DIA AdaptationQoS Descriptor specifies the relationship between resource constraints, feasible operations on the resource and associated resulting qualities. DIA Bit stream Syntax Description describes the high-level structure of the media bit stream. In the case of broadcasting service, when user constraints exist for the video bandwidth the AdaptationQoS associated to this video is consulted and the appropriate adaptation operation is extracted. Then a link to the adaptation process, which acts on the DIA Bitstream Syntax Description, is made available for the video.

4. NEEDS FOR MPEG-21 IN BROADCASTING

The use of the MPEG-21 data model within the broadcasting environment can potentially bring many benefits to the professional user and ultimately to the end-user. Within a studio/post-production facility, there is a diversity of processing stages - or *islands* - and consequently the need to exchange information between those different islands. Usually the source material arrives from multiple archives or servers external to those islands. As such, actors in each island will need to search, browse and select multimedia information that they will use to edit and produce the program. And the result of their work will then have to be collected by another actor and conveniently packaged and sent to the continuity/playout center and then finally broadcasted or distributed. In this scenario it is clear the benefits that arise from the use of common descriptions and formats in order to facilitate the location and exchange of content. Using MPEG-21 in this context would facilitate all these tasks promoting the interoperability between different environments and the re-usability of both content and other resources.

Looking more closely at a concrete use case within a post-production facility, we can for example choose the case of a production of an audio-visual documentary on any subject X and analyse the potential benefits that would arise from the adoption of MPEG-21. Producing an audio-visual documentary requires the execution of a number of different phases from scripting, through research and acquisition, to editing and packaging. Throughout all these phases, intervenient actors will produce different types of metadata and at the final stage multiple formats may be generated if necessary. Our work addresses this issue with ‘metadata filtering’ as well as a DI underlying logical model, the DBIM. Different metadata formats shall be made interoperable and unified accessible.

It is not likely, nor most probably needed, that all the different description syntaxes used throughout the production and post-production chain is totally compatible or completely reusable later in the chain. However, as to ensure the possibility of re-using the content, either for a different purpose, or to re-finish it or re-packaging it with different formats for different media, it is necessary that all metadata be available all along the chain and that minimal translation in between domains be provided. This will provide for a minimum of interconnection between the different schemes used at each stage. A crucial aspect is the use of standardized schemes along all stages as to allow the definition of these interconnection rules. Important aspects of rights and permissions on how to use the content, on which devices is to be consumed are starting to be stipulated right at the early stages. So, in order to be able to make available the produced content to different consumer devices honoring the decisions of the creators and of all actors, as the content evolves from idea to finished product, it is essential to retain metadata and provide a standardized way to be able to use it later in the chain. An excellent candidate is clearly MPEG-21.

Again within a post-production facility studio, the use of MPEG-21 can potentially bring many benefits to the producer for the management of content and the efficient production of programs/services for cross-media delivery. Using MPEG-

21 provides greater flexibility for the use and adaptation of multimedia content to the different requirements of different client devices. For example it enables the efficient packaging and identification of different versions (in quality for instance) of the same image or video and the selection and retrieval of the most adequate for the client device that requested the content. In practice, it greatly facilitates the production of content for cross-media delivery, enabling therefore the content producer or broadcaster to efficiently use his content and to produce with that same content services matching the requirements and characteristics of different delivery channels and consumer devices. It allows increased, easier, efficient and secure access to multimedia content across distinct sources, environments or contexts. A data model for exchanging and managing content adopting the MPEG-21 framework has the major benefit of promoting interoperability among different systems and the possibility of using content from one context to a different one.

Another situation within the broadcasting environment where it is envisaged the benefits of MPEG-21 is the case of re-distribution of broadcast content. The content aggregator / re-distributor must extract video streams and available descriptions from the received broadcasted programs. According to the classes of clients he/she is serving, it may be necessary to perform some kind of adaptation to the content. He/she then has to adapt received descriptions into a normalized format (MPEG-7) and/or generate new content descriptions as well as context/environment descriptions. It generates the DID with all relevant information for each new program and stores it or deliver it together with the content. The use of MPEG-21 throughout the whole distribution chain will facilitate the required operations of identification, adaptation and re-packaging of content.

The practical issues concerning digital, interactive TV broadcasting are:

- Networking, Events, Channels, Services, Programs, Signaling, Encoding, Bandwidth, Conditional Access (CA), Subscription, Advertisements, Interactivity, Transmission of metadata, Digital Rights Management (DRM), Interoperability B2B and B2C, Adaptation of Content, Multi-channel Applications, QoS, …

5. USE-CASES FOR MPEG-21 IN BROADCASTING

Use-scenarios of MPEG-21 are currently under heavy investigation. Several use-scenarios can be categorized according to their application during their phase in the value-chain (e.g. consumption, creation). Figure 3 gives a tabular structure for the on going analysis of use-scenarios. The table shows matrix view of the impact on MPEG-21 standard in terms of the value chain and technical element considered in MPEG-21.

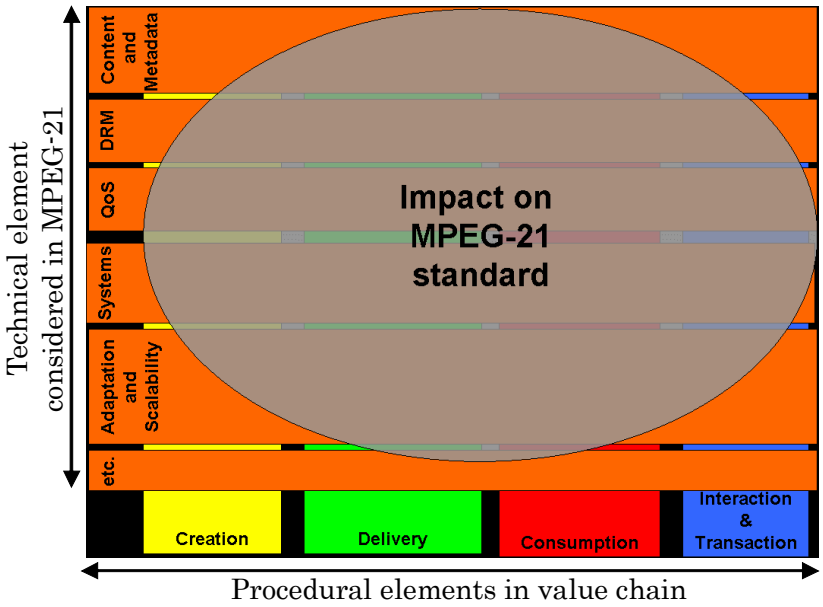

Figure 3. Digital, Interactive TV value chain

Currently we are focusing on the following use-scenarios:

1. **Digital Rights Management (DRM):** DRM is either utilized internally during creation or at consumer side. Currently internal DRM during creation phases is based on trust. MPEG-21 can reduce 'content leaking'. DRM at consumer side has many different application areas, especially in terms of Conditional Access (CA). More complex DRM schemes are required for expressing DRM for multi-channel services over different distribution networks or for multi-platform services for different types of consumer devices. MPEG-21 provides an extensive set of tools for this purpose.
2. **Adaptation:** Different consumer groups and different available resources require differentiated A/V services (e.g. broadcast in parallel to HDTV and SDTV systems). Also scalability of services not related to A/V materials is required. Complete services in form of applications have to be adjusted to available resources. Another problematic addressed is the compatibility of different types of feedback channels in the context of services (e.g. different bit-rates, types of feedback channels). Adaptation also enables a sophisticated solution for mutli-channel as well as multi-platform applications in terms of "create once – deliver many over multiple channels to various devices".
3. **Local Interactivity:** some broadcasting consumer devices do not have a feedback channel network connection. There is a need to create interactive content that does not require feedback channel networks. Advanced DRM systems shall obey similar requirements and not essentially require a feedback channel network. How to create services without feedback channel network implications and how local interactivity is established is part of this use-case.
4. **Metadata Filtering** and **Quality of Service Management (QoS)** will be introduced in further detail within the scope of this research work.
5. **Other scenarios:** Other scenarios developed consider home networking, service information management, delivery to consumer, and communication/transactional services.

6. INTELLECTUAL PROPERTY MANAGEMENT AND PROTECTION (IPMP)

The evolution of digital technologies empowers broadcasting services to allow distribution of high quality audio-visual content in digital form for various choices of devices and media. State of the art digital broadcasting systems already support a variety of digital devices today, including various types of recordable DVDs, the IEEE 1394 interface, secured hard disk recorders, 3G mobile phones as well as major types of flash memories. Interoperability among audiovisual decoding/rendering devices and other multimedia equipment is of crucial importance for a full exploitation of the available digital broadcasting services.

It is critical for broadcasters to minimize the cost of supporting all these different devices and media. However, given the rapid evolution of digital technology, the effort to keep the pace of evolution of all up-to-date digital technology is becoming unbearable. In some cases, it may impact well-established business and cultural practices currently adopted in the audiovisual content broadcasting industry, bringing about a lot of confusion (Ref. [3]). From this perspective, we are in great need for a flexible and practical tool - or toolset - capable of providing appropriate intellectual property management and protection (IPMP) of broadcasted contents.

Since this problem is related not only to broadcasting services, but it also affects the interaction among various devices treating digital multimedia content, MPEG has been trying to standardize IPMP mechanisms since 1996. It has already completed the standardization of MPEG-2 IPMP and MPEG-4 IPMP (that thereof will be referred to as MPEG-IPMP). In the case of MPEG-21 it is even a more complex issue compared to MPEG-2 and MPEG-4. In MPEG-21, IPMP issues may affect almost all other parts of the standard and it may be said to have one of the most important roles among the several MPEG-21 components. Detailed discussion on IPMP in the MPEG-21 framework has not been possible yet since most parts of MPEG-21 are still being completed. Currently, MPEG is refining the definition of requirements for MPEG-21 IPMP (Ref. [25]) and recently released a call for proposal towards the final phase of standardization (Ref. [4]).

MPEG has not yet received proposals for MPEG-21 IPMP at the time of authoring this paper. But there are already the practices in use of MPEG IPMP for MPEG-21 reference software, an understanding of MPEG IPMP may give some hints to imagine how MPEG-21 IPMP could possibly be. Figure 4 shows a conceptual block diagram of an MPEG-4 terminal implementing the IPMP Extensions. The MPEG-4 (and 2) IPMP Extensions are an amendment to the MPEG-4 (and 2) standard that has been introduced to further enhance the flexibility and interoperability of IPMP mechanisms within MPEG-4 (and MPEG-2). It is based on a messaging interface that enables the several interoperating IPMP tools to "talk" each other and to interact with the terminal.

The content (left in the figure) contains a data structure referred to as IPMP Tool List, which includes IPMP Tool IDs and IPMP Tool Locations. Using these pieces of information, Terminals may find the small modules named IPMP tools that will control the access to the content. They can be either inside the terminal (in the case of embedded IPMP tools), on the network or on any accessible remote sources. After identifying and collecting the required IPMP tools, the Terminal will activate them and those terminal elements implementing the IPMP messaging interfaces. At the completion of this process the complete protection system required by the owner(s) of the rights on the content will be up and running in the given terminal.

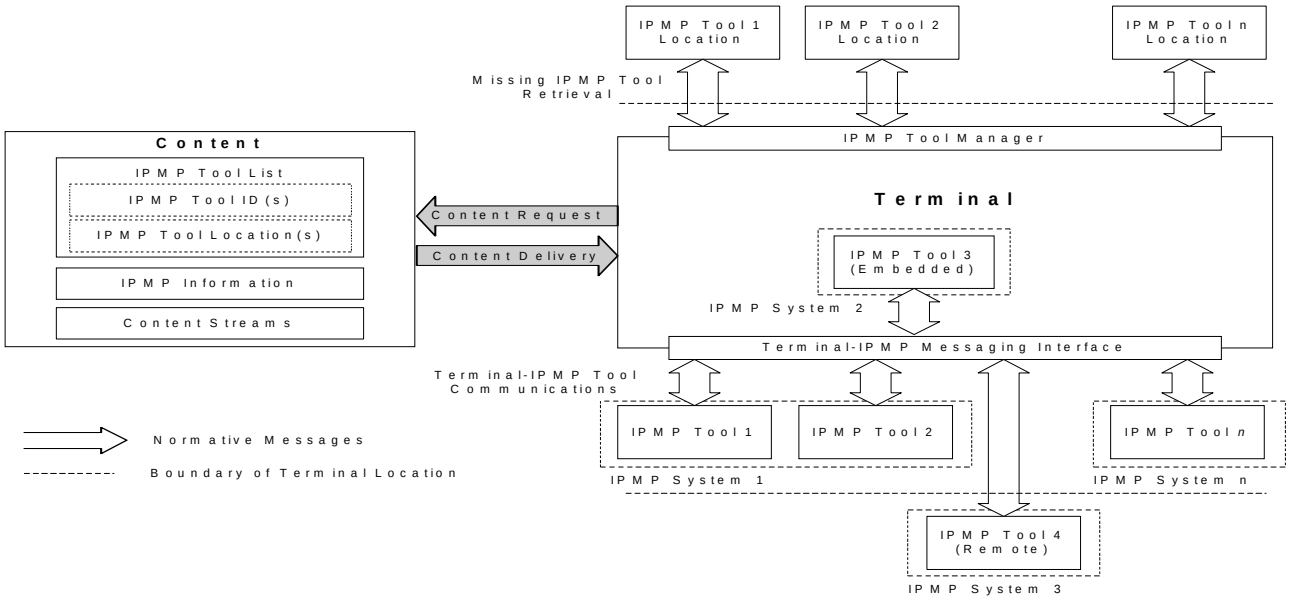

Figure 4. MPEG-4/IPMP architecture

From figure 4 it is possible to understand how an MPEG-4 compliant terminal can be enhanced with IPMP Extensions by simply implementing and integrating the IPMPX messaging interface. Such an interface allows IPMP Tools from different vendors to be plugged and played in the terminal and to interoperate so as to build more complex IPMP systems.

7. QUALITY OF SERVICE MANAGEMENT

The management of *QoS (Quality of Service)* throughout the broadcasting chain, from content production to end-user consumption is a real issue in the broadcasting world. The goal is to achieve the best possible QoS for the end users taking into account their expectations as well as the technological capabilities of the terminal and the resources and technical parameters of the delivery networks. The main benefit is the provision of end-to-end control of the QoS delivered to the end user. Generalized IP networks are used to feed professional TV and radio broadcast networks. There is a need to enforce Service Level Agreements in many multimedia applications which can require a variety of QoS.

As a specific use case, an end user receives multimedia content through a broadcasting infrastructure with some guaranteed QoS. The user may have different types of terminals (Set-Top-Box, PC, mobile phone, video-game consoles…) and access over heterogeneous networks, for example with multi-channel distribution (DVB-T, DVB-S, DVB-H, UMTS…). Generally, the QoS at the end-user side is measured by the perceptual quality (audio or video). However, QoS may be defined differently at other points of the broadcast chain. For example, at the network level, QoS is given by the available bandwidth, error characteristics, delay and jitter. These different aspects should be considered when monitoring and controlling the end-to-end QoS and reinforce the requirement for some integrated methods of management to allow control throughout the distribution chain.

In that context several requirements and implications could be extracted:

- The provision of end-to-end QoS is not considered as an unidirectional set up process, but as a multiple feedback mechanism:
    - QoS level is initially requested by the end-user
    - QoS is monitored and controlled several times in a variety of points, from the content generation phase to its consumption, through various networks.
- There is a need to manage the interconnecting components/modules of the broadcast chain (content generation, network and terminal) providing the end-user or any requesting entity, the access to the services in a consistent, unified way.
- There is a need for a flexible multimedia content format to allow easy and optimal adaptation to meet the constraints of different networks and terminals.
- Requirements for an automated, cost-effective and efficient policy-based end-to-end QoS solution include:
    - Allowing Content Providers and Network Service Operators to provide the end user reception with the contractual quality;
    - Simplifying and automating the management of complex networks;
    - Defining the high-level management objectives, enforced in the network equipment as a set of policies.
    - Measuring the Perceived and Network QoS at user terminal and network levels
    - Tracking the network where contractual Quality is broken.

Based on these requirements listed for the referred use case scenario, several MPEG-21 developed parts provide interesting tools. Some relevant examples are indicated bellow:

- **MPEG-21 DIA:**
    - There are several description tools related to QoS in MPEG-21 DIA specification. For example `AdaptationQoS` description tools are designed for the adaptation of the audio and video bit streams to match the network constraints, especially bandwidth.
    - `Terminal capabilities` are description tools defined in MPEG-21 DIA. There are several descriptors that refine terminal capabilities such as number of speakers, screen size, etc. The descriptors are designed for the adaptation of the multimedia content for fitting the exact characteristics of the consuming end-user terminal.
    - `Network characteristics` are specified in terms of network capabilities and conditions, including available bandwidth, delay and error characteristics. For a single network characteristics include static network capabilities, such as the maximum capacity of a channel, as well as time-vary conditions such as the available bandwidth, error characteristics and attributes that describe the delay.
- **MPEG-21 SVC:** This is new scalable video coding format currently being developed in MPEG-21. The requirements on this video coding format specify different levels of scalability (spatial, temporal, SNR) and the resulting video format will be easier to adapt to different network constraints and terminals capabilities.

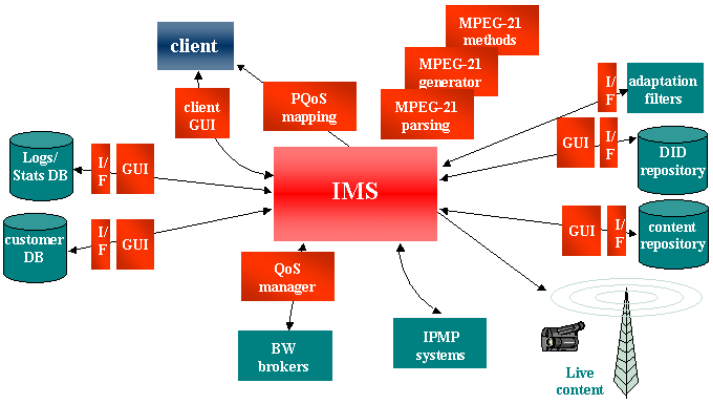

Figure 5. Illustration diagram of the IMS system

Again based on the described scenario, the corresponding requirements and on the availability of MPEG-21 tools and capabilities, it is possible to devise an integrated management system based on the MPEG-21 data model capable of supervising and enforcing the provision of the desired QoS to heterogeneous clients in the described terms. Such an Integrated Management Supervisor (IMS) is being designed within the context of the European project IST-507637 ENTHRONE (Ref 26). This system will be developed based on distributed technologies and will use at the application layer the MPEG-21 data model to exchange messages with all the actors of the QoS-aware multimedia broadcasting infrastructure. Users will interact with this supervisor in order to gain access to the desired content and will receive and consume it under the desired preferences, terminal capabilities and network conditions in a transparent way. The information that will be necessary to exchange between the different actors of the infrastructure to achieve these objectives will be mainly in the form of MPEG-21 and MPEG-7 descriptors. A simplified functional diagram of such a supervisor system is given in Figure 5.

8. METADATA FILTERING

A broadcaster would like to make use from the manifold data contained in different representation formats. The data should be extracted semi-automatically for standard services such as the digital TV program guide, compilation of a new broadcast show and for information services such as weather forecasts. Some part of the information shall also be published on other information channels as e.g. on Web-pages. Re-use of metadata, template libraries for services and computer assisted editing are some examples for how the process can be made easier. The goal is to introduce metadata filtering as basic concept to integrate metadata across systems (see figure 6).

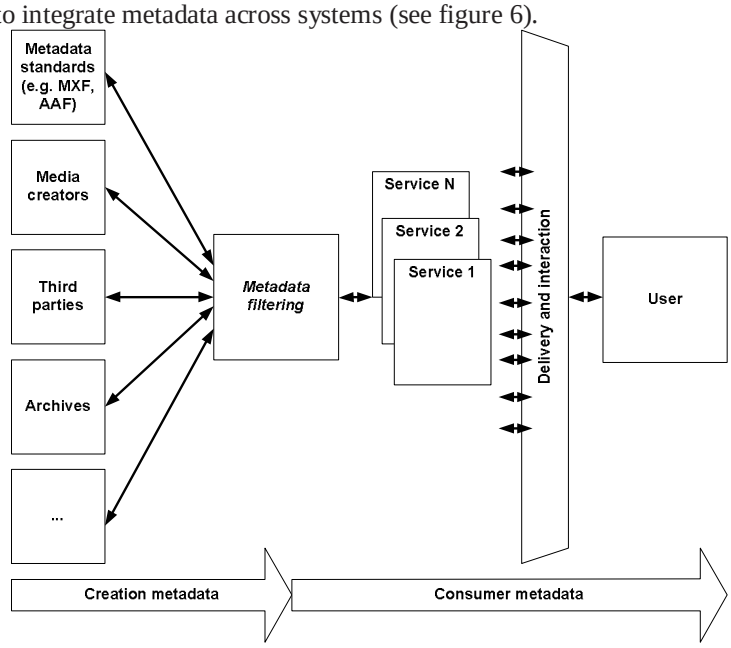

Figure 6. Metadata filtering

Besides TV-Anytime most of the standards focus on professional production of broadcasting content. Issues such as data capturing, transfer, search, archive, packaging, encapsulation of content and metadata, etc. are covered. But metadata should be re-used and converted between various different representations. This includes the provision of conversation mechanisms (e.g. MXF to TV-Anytime, service information to TV-Anytime) to convert between different metadata formats.

A very specific example in broadcasting is the management of service information. Service information describes the content of television programs. In principle service information is the basis for an electronic TV program guide, commonly known as Electronic Program Guide (EPG). Service information is organized in many different tables. The data for these tables needs to be manually edited, maintained, re-edited and extracted from multiple sources. This implies a simpler solution to automatically obtain basic information for the EPG and prepare it for play-out. MXF and AAF files are one source for the basic EPG information. Metadata filtering addresses the catalysis of metadata from different

sources. It also includes the preparation of metadata for play-out. The term catalysis addresses several metadata processes, such as metadata transformation, conversion of metadata, building the content of metadata files (e.g. through segmentation, data mining), validation or visualization.

We can distinguish between creation metadata and consumer metadata. Creation metadata is metadata typically used in professional broadcast systems. Examples are MXF, AAF and the P/Meta initiative. Consumer metadata convolves several data structures delivered to consumer networks for further use. Examples are service information making up the basic information for the Electronic Program Guide (EPG), TV-Anytime descriptions and especially MPEG-21 metadata. The process of metadata filtering transforms metadata from creation metadata types to consumer play-out metadata.

The key of metadata filtering is:

- catalysis of metadata from multiple sources during production;
- conversation of different metadata formats;
- packaging of broadcast assets with MPEG-21;
- filtering of consumer metadata;
- metadata for B2C delivery of broadcast content;
- mapping of metadata across systems;
- integration of metadata structures;

9. DIGITAL BROADCAST ITEM MODEL (DBIM)

The purpose of the DBIM is to harmonize several metadata standards as utilized in broadcasting under the umbrella MPEG-21 towards a unified life-cycle and workflow model. It has been firstly introduced in Ref. [24]. The DBIM is based on an MPEG-21 DI especially used in broadcast context throughout the broadcast value-chain. Especially in broadcasting it should package content and metadata to one virtual content package for distributing digital TV content. A DI is used to communicate between several partners in the value-chain. It consists of: *metadata building blocks* defining metadata used in the descriptive units of a DI; a *service architecture* capable to process, store and manage DBIs; *dynamic behavior description* describing the life-cycle in applications; *local facilities* on consumer side to process DIs at consumer side; a *communication model* for inter-device communication by utilizing advanced metadata models; and a *multimedia asset representation* to align content representation.

10. CONCLUSIONS

Within the scope of this paper we were able to present a brief description of the MPEG-21 standard and its potential applications in broadcasting. A few important use-scenarios have been described to illustrate such applications. MPEG-21 provides an excellent solution for solving issues such as QoS management, IPMP or adaptation in an excellent way. In the near future we will be able to report about more advanced use-scenarios and their technical challenges. MPEG-21 is the “21st Century Multimedia Framework” (Ref. [1]) – also in broadcasting!

11. ACKNOWLEDGEMENTS

We would like to thank several members of the MPEG ad-hoc group. As this publication would not have been possible with the teamwork within MPEG numerous contributors would have to be listed here. Therefore - “thanks’a’million” to all ad-hoc group members as well as friends and colleges in MPEG. Especially we would like to thank Rob Koenen and Kate Nines for all their help, support, lingual suggestions and discussions.

REFERENCES

1. J. Bormans, J. Gelissen and A. Perkis, "MPEG-21: The 21st Century Multimedia Framework", IEEE Signal Processing Magazine, March 2003, Vol. 20, No. 2.
2. F. Pereira and I. Burnett, "Universal Multimedia Experiences for Tomorrow", IEEE Signal Processing Magazine, March 2003, Vol. 20, No. 2.
3. I. Kaneko, K. Shirai, "The Multi-Lateral Security Framework For The Ubiquitous Audiovisual Services", IEEE Proc. SMC2001, ISBN 0-7803-7089-9, pp.3336-3342, 2001.

4. ISO/IEC JTC1/SC29/WG11, “Final Call for Proposals for MPEG-21 IPMP”, December 2003, ISO/IEC JTC1/SC29/WG11/N6270.
5. I. Burnett, R. Van de Walle, et al.,"MPEG-21: goals and achievements", IEEE Trans. on Multimedia 10(4): 60-70, 2003.
6. A. Perkis, J. Zhang, T. Halvorsen, J. Olav Kjøde and F. Rivas, "A streaming media engine using Digital Item Adaptation", In Proc 2002 IEEE Workshop on Multimedia Signal Processing, St. Thomas 9-11 December, 2002.
7. E. Fossbakk, P. Manzanares, J. L. Yago, A. Perkis, "An MPEG-21 framework for streaming media", in Proc. 2001 IEEE Workshop on Multimedia Signal Processing, Cannes 3-5 October, 2001.
8. ISO/IEC 21000-1. MPEG-21 Multimedia Framework - Part 1: Vision, Technologies and Strategy,. http://www.iso.ch/iso/en/ittf/PubliclyAvailableStandards, 2002.
9. ISO/IEC 21000-2. MPEG-21 Multimedia Framework - Part 2: Digital Item Declaration. http://www.iso.ch/iso/en/ittf/PubliclyAvailableStandards, 2003.
10. ISO/IEC 21000-3. MPEG-21 Multimedia Framework - Part 3: Digital Item Identification. http://www.iso.ch/iso/en/ittf/PubliclyAvailableStandards, 2003.
11. ISO/IEC 21000-4. MPEG-21 Multimedia Framework - Part 4: Intellectual Property Management and Protection. Currently in progress, http://www.iso.ch/iso/en/ittf/PubliclyAvailableStandards.
12. ISO/IEC 21000-5 (N5939). MPEG-21 Multimedia Framework - Part 5: Rights Expression Language (REL) (Final Draft of International Standard). http://www.iso.ch/iso/en/ittf/PubliclyAvailableStandards, 2003.
13. ISO/IEC 21000-6 (N5842). MPEG-21 Multimedia Framework – Part 6: Rights Data Dictionary (RDD) (Final Draft of International Standard). http://www.iso.ch/iso/en/ittf/PubliclyAvailableStandards, 2003.
14. ISO/IEC 21000-7 (N5845). MPEG-21 Multimedia Framework – Part 7: Digital Item Adaptation (Final Committee Draft). http://www.iso.ch/iso/en/ittf/PubliclyAvailableStandards, 2003.
15. ISO/IEC 21000-10 (N5855). MPEG-21 Multimedia Framework – Part 10: Digital Item Processing (Working Draft). http://www.iso.ch/iso/en/ittf/PubliclyAvailableStandards, 2003.
16. ISO/IEC 21000-11 (N5875). MPEG-21 Multimedia Framework – Part 11: Evaluation of Persistent Association Tools (Working Draft). http://www.iso.ch/iso/en/ittf/PubliclyAvailableStandards, 2003.
17. ISO/IEC 21000-12 (N5640). MPEG-21 Multimedia Framework – Part 12: Resource Delivery Test Bed (Working Draft). http://www.iso.ch/iso/en/ittf/PubliclyAvailableStandards, 2003.
18. ISO/IEC 21000-13. MPEG-21 Multimedia Framework – Part 13: Scalable Video Coding (SVC), under development.
19. MXF, Material eXchange Format (MXF): http://www.mxf.org/.
20. Pro-MPEG, Pro-MPEG Forum: http://www.pro-mpeg.org.
21. AAF, AAF Association, http://www.aafassociation.org.
22. SMPTE, Society for Motion Picture and Television Engineers: http://www.smpte.org.
23. TV-Anytime, TV-Anytime: http://www.tv-anytime.org.
24. A. Lugmayr, S. Niiranen, et al., "Applying MPEG-21 in digital television - example use scenarios: epostcard, egame, and eticket", 2002 IEEE International Conference on Multimedia and Expo Proceedings, 2002..
25. ISO/IEC JTC1/SC29/WG11 "Draft requirements for MPEG-21 IPMP and Reference Model", December 2003, ISO/IEC JTC1/SC29/WG11/N6271.
26. IST-507637 ENTHRONE, “End to End QoS through Integrated Management of Content, Networks and Terminals”, http://www.enthrone.org.