EXPOSURE ASSESSMENT TO RADIONUCLIDES TRANSFER IN FOOD CHAIN

SHORT TITLE: RADIONUCLIDES TRANSFER IN FOOD CHAIN

MARIA DE LURDES DINIS AND ANTÓNIO FIÚZA
Geo-Environment and Resources Research Centre (CIGAR)
Engineering Faculty, Porto University, Rua Dr. Roberto Frias, 4200-465, Porto, Portugal. mldinis@fe.up.pt; afiuza@fe.up.pt

Abstract: Generally sites with radioactive contamination are also simultaneously polluted with many other different toxics, especially heavy metals. Besides the radioactivity, these wastes may also hold different amounts of chemicals, toxic pollutants and precipitates. The radionuclides released into the environment can give rise to human exposure by the transport through the atmosphere, aquatic systems or through soil sub-compartments. The exposure may result from direct inhalation of contaminated air or ingestion of contaminated water, or from a less direct pathway, the ingestion of contaminated food products. Contamination of the trophic chain by radionuclides released into the environment will be a component of human exposure to ionizing radiations by transferring the radionuclides into animal products that are components of the human diet. This can occur by first ingestion of contaminated pasture by animals and then by ingestion of animal products contaminated. The relevant incorporation of the radionuclides into cow's milk is usually due to the ingestion of contaminated pasture. This transfer process is often called the *pasture-cow-milk* exposure route. A compartment dynamic model is presented to describe mathematically the radium behaviour in the *pasture-cow-milk* exposure route and predict the activity concentration in each compartment. The dynamic model is defined by a system of linear differential equations with constant coefficients based in a mass balance concept. For each compartment a transient mass balance equation defines the relations between the inner transformations and the input and output fluxes. The concentration within each compartment is then transcribed to doses values based on a simplified exposure pathway and a pre-defined critical group.

Keywords: exposure assessment, radium, dynamic model, differential equations

Journal Information

1. Introduction

The environmental effects originated by uranium mining activities result mainly from the large volume of residues produced by the ore processing. Besides the radioactivity these wastes may also hold different amounts of chemicals, toxic pollutants and precipitates originated by pH or Eh alterations. The radionuclides released from these wastes can give rise to human exposure by transport through the atmosphere, aquatic systems or through soil sub-compartments. The exposure may result from direct inhalation of contaminated air or ingestion of contaminated water, or from a less direct pathway - the ingestion of contaminated food products. Nevertheless this pathway can be quite significant as a result of biological concentration in the foodstuff.

The exposure resulting from airborne particulates containing ^{230}Th, ^{226}Ra, and ^{210}Pb as well as uranium, is primary by the inhalation of particles and or through the food chain. The predominant target effective dose from these radionuclides is to the bones. Non-radioactive metals and other chemical reagents may also induce chronic or acute health effects. The harmful effects of radionuclides do not come from their chemistry within tissue, but from the radiation associated with radioactive decay which increases the risk of cancer.

Radionuclides deposition can be a significant pathway to human exposure by first ingestion of contaminated pasture by animals and then by the ingestion of animal products contaminated (dairy or meat). Plants in general tend to accumulate radionuclides in a scale dependent on many factors and within animals and humans, certain tissues tend to accumulate selected radionuclides. The relevant incorporation of the radionuclides in the milk is usually due to the ingestion of contaminated pasture. This transfer process is often called the *pasture-cow-milk* exposure route. We developed a compartment dynamic model to describe mathematically the radionuclide behaviour in the *pasture-cow-milk* exposure route and predict the activity concentration in each compartment following an initial radionuclide deposition.

2. Methods and Results

2.1. DESCRIPTION OF THE MODEL

The dynamic model consists of a system of linear differential equations with constant coefficients describing the mass balance in different compartments taking in account the fluxes in and out of the compartment and the radionuclides decay. For each compartment, a transient mass balance equation defines the relations between the inner transformations and the input and output fluxes. The fluxes between the compartments are estimated with a

transfer rate proportional to the amount of the radionuclide in the compartment. The model also considers possible transformations within the compartment.

The first model considered for the propagation through the food chain is relatively simple and classic and considers as initial state a contaminated pasture that is consumed by a cow that produces a certain quantity of milk. The transfer coefficients for soil and pasture compartments are expressed as function of soil characteristics and ecological parameters. A more sophisticated model is also described taking into account the spread of radium within the cow by including the sub-compartments involved: the gastrointestinal system (GIT), the plasma and the bones. The transfer coefficients for the sub-compartments within the cow are combined with biological half-lives which is the time taken for the radionuclide activity concentration in tissues or milk be reduced by one half of its initial value.

The processes involved in the radionuclide transfer to cow milk resulting from consumption of contaminated pasture are: i) pasture deposition; ii) deposition on the soil; iii) retention of radionuclides by pasture over a certain period of time; iv) root uptake; v) consumption of contaminated pasture by the cow and vi) the secretion of radionuclides into the milk. A scheme of the conceptual model is given in Figure 1.

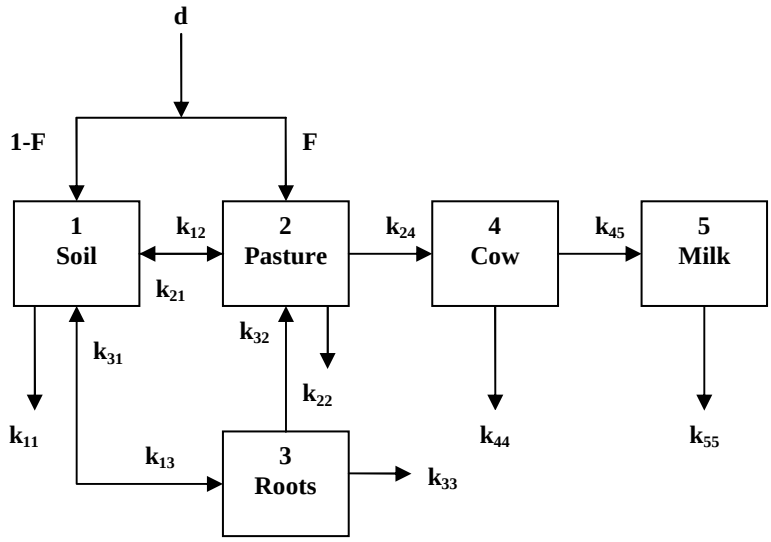

Figure 1: Conceptual scheme of the model for the pasture-cow-milk exposure route.

For the compartment 1 the input fluxes results from the fraction of the radionuclides deposition (d, $Bq \cdot m^{-2} \cdot d^{-1}$) that is not intercepted by pasture (1-F) and goes directly to the soil, the radionuclides weathering from pasture surface ($k_{21,}$ d^{-1}), after the material has been deposited onto the pasture surface it will

begin to weather off the surface, and the transfer from pasture to soil (k_{31}, d^{-1}), considering that root uptake is a reversible process described with first order kinetic equations for the root uptake balance (Teale *et al*, 2003; IAEA, 2002). The outputs fluxes results from losses in the compartment 1 due to radioactive decay and environmental processes related to radionuclide migration in soil (k_{11}, d^{-1}), resuspension of radioactive particles from soil and subsequent deposition onto pasture surface (k_{12}, d^{-1}) and root uptake (k_{13}, d^{-1}). The transient mass balance equation for compartment 1 is defined by the following equation:

$$\frac{dA_1}{dt} = d \cdot (1 - F) \cdot A_s - k_{11}A_1 - k_{13}A_1 - k_{12}A_1 + k_{21}A_2 + k_{31}A_3 \quad (1)$$

For the compartment 2 the inputs fluxes results from the fraction of radionuclides deposition intercepted by pasture surface (F), the resuspension of radioactive particles from soil and subsequent deposition onto pasture surface (k_{12}, d^{-1}) and the translocation from pasture roots to the interior of the grass or to any other edible parts (k_{32}, d^{-1}). The output fluxes results from the losses in this compartment due to radioactive decay (k_{22}, d^{-1}), the radionuclides weathering from pasture surface ($k_{21,}$ d^{-1}) and by the ingestion of contaminated pasture (k_{24}, d^{-1}). The transient mass balance equation for compartment 2 is defined by the following equation:

$$\frac{dA_2}{dt} = d \cdot F \cdot A_p + k_{12}A_1 - k_{22}A_2 - k_{21}A_2 - k_{24}A_2 + k_{32}A_3 \quad (2)$$

The input flux in compartment 3 results from the radionuclides transfer from soil to pasture by root uptake (k_{13}, d^{-1}). The outputs fluxes in this compartment results from the losses by radioactive decay (k_{33}, d^{-1}), the translocation from pasture roots to the interior of the grass or to other edible parts (k_{32}, d^{-1}) and the transfer from pasture roots to soil (k_{31}, d^{-1}), considering that root uptake is a reversible process. In the simpler approach root uptake transfer (k_{13}) is estimated with the soil to grass transfer factor, TF ($Bq \cdot kg^{-1}$, fresh mass/$Bq \cdot kg^{-1}$, dry mass), pasture roots biomass, M_p ($kg \cdot m^{-2}$), the soil mass in soil compartment, M_s ($kg \cdot m^{-2}$), and the equilibrium root uptake transfer, k_{31} (d^{-1}) (Teale *et al*, 2003). The transient mass balance equation for compartment 3 is defined by the following equation:

$$\frac{dA_3}{dt} = k_{13}A_1 - k_{33}A_3 - k_{32}A_3 - k_{31}A_3 \quad (3)$$

and k_{13} is defined by

$$k_{13} = TF \cdot \frac{M_p}{M_s} \cdot k_{31} \quad (4)$$

For the compartment 4, the input flux results from the cow intake of contaminated pasture (k_{24}, d^{-1}) and the outputs results from the losses in this compartment due to radioactive decay (k_{44}, d^{-1}) and the secretion into cow's milk (k_{45}, d^{-1}). The transient mass balance equation for compartment 4 is defined by the following equation:

$$\frac{dA_4}{dt} = k_{24}A_2 - k_{44}A_4 - k_{45}A_4 \quad (5)$$

Finally, for the compartment 5, the input flux results from radionuclides secretion into cow's milk (k_{45}, d^{-1}) and the output is the loss due to radioactive decay (k_{55}, d^{-1}). The transient mass balance equation for compartment 5 is defined by the following equation:

$$\frac{dA_5}{dt} = k_{45}A_4 - k_{55}A_5 \quad (6)$$

In the previous equations, d represents the total deposition ($Bq \cdot m^{-2} \cdot d^{-1}$), A_s the soil compartment area (m^2), A_p the pasture compartment area (m^2), F is the interception factor (dimensionless) defined as the fraction of the activity deposited on the ground (soil and pasture) which is intercepted by vegetation during the time of deposition, k_{ii} are the losses from compartment i (d^{-1}) and k_{ij} are the kinetic transfer from compartment i to compartment j (d^{-1}). The equations system can be represented in the following matrix form and solved numerically in appropriate software.

$$\begin{bmatrix} \frac{dA_1}{dt} \\ \frac{dA_2}{dt} \\ \frac{dA_3}{dt} \\ \frac{dA_4}{dt} \\ \frac{dA_5}{dt} \end{bmatrix} = \begin{bmatrix} -k_{11}-k_{13}-k_{12} & +k_{21} & +k_{31} & 0 & 0 \\ +k_{12} & -k_{22}-k_{21}-k_{24} & +k_{32} & 0 & 0 \\ +k_{13} & 0 & -k_{33}-k_{32}-k_{31} & 0 & 0 \\ 0 & +k_{24} & 0 & -k_{44}-k_{45} & 0 \\ 0 & 0 & 0 & +k_{45} & -k_{55} \end{bmatrix} \cdot \begin{bmatrix} A_1 \\ A_2 \\ A_3 \\ A_4 \\ A_5 \end{bmatrix} + \begin{bmatrix} d \cdot (1-F) \cdot A_s \\ d \cdot F \cdot A_p \\ 0 \\ 0 \\ 0 \end{bmatrix}$$

Figure 2: Matrix form of the balance equations from the conceptual model (simple).

In the complete model, the radium distribution within the cow is modelled by including 3 more sub-compartments: the gastrointestinal system (GIT), the plasma and the bones. The scheme for the conceptual model describing the radionuclide transfer within the cow adapted from the International Commission on Radiological Protection (ICRP) biokinetic models (Leggett *et al*, 2003) is represented in Figure 3.

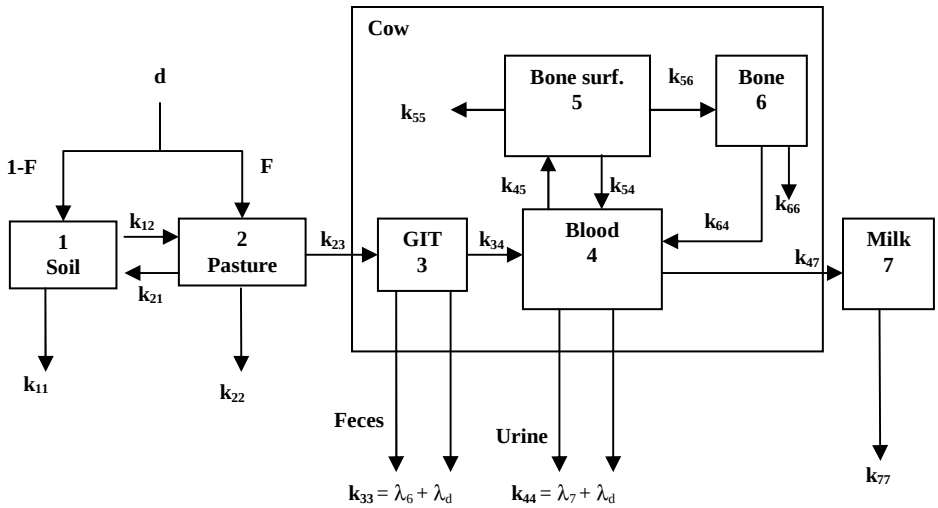

Figure 3: Conceptual model for radium kinetics in the cow (IAEA, 2004; Leggett *et al*, 2003).

Within animals and humans certain tissues tend to accumulate selected radionuclides. From what is known about radium retention and distribution in the organism after oral exposure, radium is quickly distributed to body tissues followed by a rapid decrease of its content in blood. It later appears in the urine and feces. Retention in tissues decreases with time following maximal uptake, not long after the intake to blood. Bones become the principal radium repository in the body and this is due to its chemical similarity with calcium. Two compartments are considered for bones: a bone surface compartment (5) in which radium is retained for short periods and a bone volume compartment (6) in which radium is retained for long periods (Leggett *et al*, 2003). The system of linear equations for this conceptual model is obtained as previous by defining a transient mass balance equation for each compartment. The resulting matrix with constant coefficients is represented below.

$$\begin{bmatrix} \frac{dA_1}{dt} \\ \frac{dA_2}{dt} \\ \frac{dA_3}{dt} \\ \frac{dA_4}{dt} \\ \frac{dA_5}{dt} \\ \frac{dA_6}{dt} \\ \frac{dA_7}{dt} \end{bmatrix} = \begin{bmatrix} -k_{11}-k_{12} & k_{21} & 0 & 0 & 0 & 0 & 0 \\ k_{12} & -k_{22}-k_{21}-k_{23} & 0 & 0 & 0 & 0 & 0 \\ 0 & k_{23} & -k_{34}-k_{33} & 0 & 0 & 0 & 0 \\ 0 & 0 & k_{34} & -k_{44}-k_{45}-k_{47} & k_{54} & k_{64} & 0 \\ 0 & 0 & 0 & k_{45} & -k_{56}-k_{55}-k_{54} & 0 & 0 \\ 0 & 0 & 0 & 0 & k_{56} & -k_{66}-k_{64} & 0 \\ 0 & 0 & 0 & k_{47} & 0 & 0 & -k_{77} \end{bmatrix} \cdot \begin{bmatrix} A_1 \\ A_2 \\ A_3 \\ A_4 \\ A_5 \\ A_6 \\ A_7 \end{bmatrix} + \begin{bmatrix} d\cdot(1-F)\cdot A_s \\ d\cdot F\cdot A_p \\ 0 \\ 0 \\ 0 \\ 0 \\ 0 \end{bmatrix}$$

Figure 4: Matrix form of the balance equations from the conceptual model (complete).

2.2. EXAMPLE OF MODEL SIMULATION

The first model considered for the radionuclides propagation through the food chain is relatively simple and classic. It considers as initial state a contaminated pasture that is consumed by a cow that produces a certain quantity of milk. In this simpler model the processes involved in radionuclides transfer to pasture are deposition, resuspension and root uptake. Deposition is the only contamination source and there is no pasture irrigation considering that rainfall water is enough for pasture growing.

A simulation was done for a constant radionuclide input of 1 $Bq \cdot m^{-2} \cdot d^{-1}$ in a hypothetical case study. The necessary parameters were adopted from different sources: some parameters were adopted from measurements referring to a particular contaminated site (Falcão *et al*, 2005) and others were adopted from published data on radionuclide behaviour in animals, such as distribution or retention in different organs and tissues and subsequent excretion routes (IAEA, 2004). The unknown parameters were estimated from available data.

The rate at which the radionuclides on pasture surface are weathered off onto the soil has been estimated using a weathering half-life. A default value of 14 days has been adopted which is consistent with literature values and the value for the kinetic constant representing this transfer process (k_{21}) is 0,495 d^{-1} (Teale *et al*, 2003).

The radionuclide migration down the column soil and out of reach of the roots can be modeled using a loss from the soil compartment based on a soil migration half-life. The default value adopted from literature is 2,5 x 10^4 days (Hoffman *et al*, 1984) and the value for the kinetic constant, k_{11}, which represents the radium decay losses and the losses due to its migration in soil, is 2,82 x 10^{-5} d^{-1}.

Available data on root uptake is in the form of a transfer factor defined as the ratio of activity concentration in the edible part of the plant ($Bq \cdot kg^{-1}$, fresh mass) to that in the soil ($Bq \cdot kg^{-1}$, dry mass), once equilibrium has been reached. This transfer pathway was included in the conceptual model although it is not relevant when the contamination is due to deposition. To model this process, a pair of transfer rates between the soil and the roots compartments was used. The transfer factor implies equilibrium conditions which should be reached quickly to legitimate its use (Teale *et al*, 2003). To achieve this, the equilibrium rate was set to one day and the resulting value for k_{31} is 0,693 d^{-1}. The soil to plant transfer factor for radium in pasture, k_{13}, suggested in literature is 0,08 (IAEA, 1994).

The initial conditions were defined for the two first compartments (soil and pasture). For the other compartments the initial activity was considered to be inexistent. Pasture and soil compartments have an area of 1 000 m^2 each and the

grass biomass is 1 kg·m^{-2}. The same value was considered for the grass roots biomass. Pasture consumption is 50 kg·d^{-1} and the daily milk production is 12 kg.

For the exploration of the model several radionuclides were defined as relevant but, for the present, only radium was considered in the calculations, due to the availability of data. The endpoints are radium concentrations in soil, pasture, cow (whole body) and milk, in the simpler model. The results of the model calculations for radium activity can be seen in the figures below:

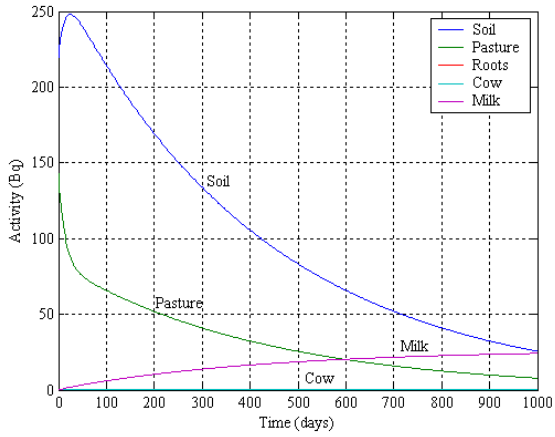

Figure 5: Time variation of ^{226}Ra activity in each compartment, Bq.

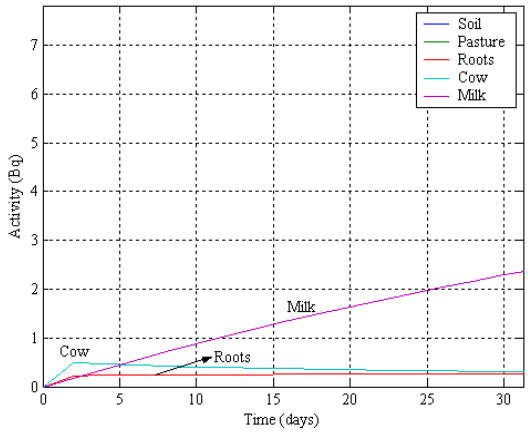

Figure 6: Time variation of ^{226}Ra activity in each compartment (amplified), Bq.

To transcribe the results to doses values it is necessary to estimate the concentration in each compartment. This can be done by computing the ratio

between the resulting activity and the volume of the respective compartment. The results of the model calculations for concentration in each compartment with units of $Bq \cdot kg^{-1}$ are represented in the figures below.

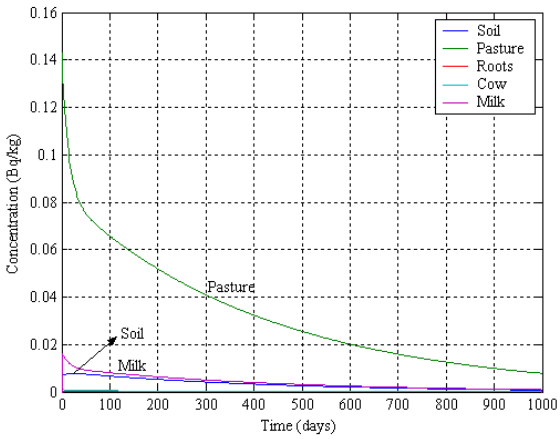

Figure 7: Time variation of ^{226}Ra concentration, Bq/kg.

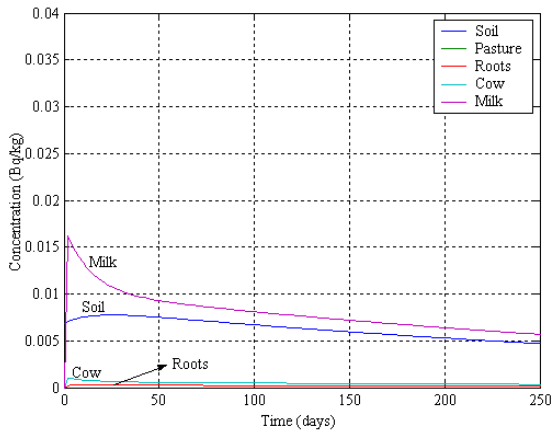

Figure 8: Time variation of ^{226}Ra concentration (amplified), Bq/kg.

Considering the radionuclide transfer within the cow for modelling the distribution, retention and elimination in each compartment, the endpoints are GIT, plasma, bone and milk. For the exploration of this model the same conditions from the previous exploration were considered. Root uptake was negligee for model simplicity and considering the fact this transfer pathway is not relevant when the pasture contamination is primary due to deposition.

Radium transfer rates for excretion (λ_6) , git-blood (included in k_{34}), urinary excretion (λ_7), milk excretion (included in k_{47}), blood-bone surface (included in k_{45}), bone surface-blood (include in k_{54}), bone surface-bone (included in k_{56}) and bone-blood (included in k_{64}) were selected from specialized literature (IAEA, 2004; Leggett *et al*, 1987; 2003).

The results of the model calculations for radium activity and concentration are represented in the next figures:

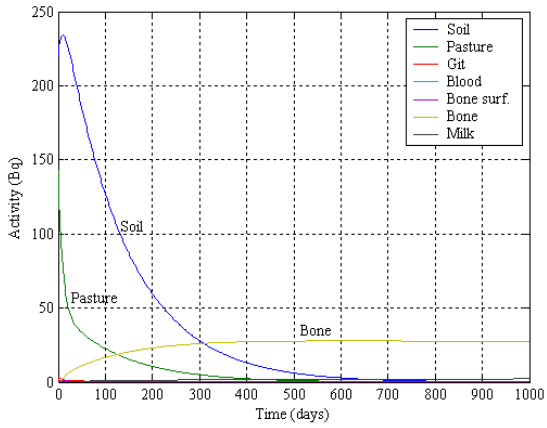

Figure 9: Time variation of ^{226}Ra activity in each compartment within the cow, Bq.

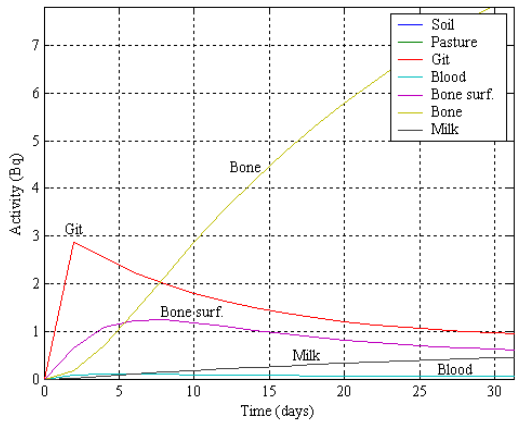

Figure 10: Time variation of ^{226}Ra activity in each compartment within the cow (amplified), Bq.

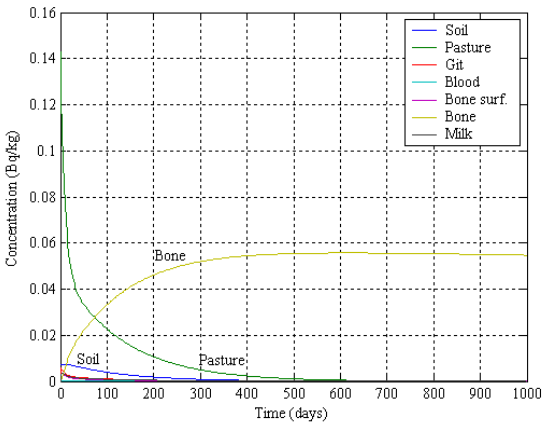

Figure 11: Time variation of ^{226}Ra concentration within the cow, Bq/kg.

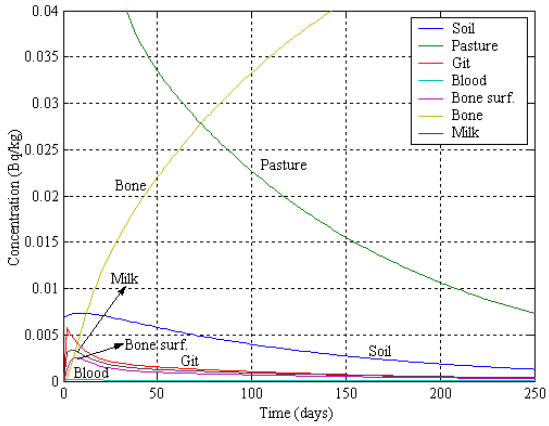

Figure 12: Time variation of ^{226}Ra concentration within the cow (amplified), Bq/kg.

Radium concentration of pasture grass decreases with time after deposition. The concentration in soil also decreases with time although, initially it has a slight increasing probably due to the activity removed from pasture by the environmental processes and transferred to soil. The radium concentration in soil is quite lower than concentration in pasture which can be explained by the fact that grass leaves intercept almost the deposition and beside that, soil surface is covered with the pasture limiting the deposition onto the soil. Roots concentration is very low which confirms that this pathway is negligible in case pasture contamination is due to deposition.

Radium concentration in cow (whole organism) reaches its maximum quickly and then it decreases with time. Radionuclides present in cow's diet are

probably absorbed from the gastrointestinal tract to blood. Radium is eliminated from the body, mainly from the feces with smaller amounts being excreted in the urine (Leggett *et al*, 2003). Some organs and tissues, notably bones, have the capacity to concentrate radium from blood and although some of the radium is excreted through the feces and urine over a long time, a portion will remain in the bones throughout the organism's lifetime. ICRP considers that radium removal from bone volume to blood occurs very slowly during organism life having a biological half-time of about 1200 days (Leggett *et al*, 1987). Less notably but also important, radium can be concentrated in mammary glands and be present in the milk of lactating animals. For this reason, the radium transfer from cow diet to milk has received particular attention.

3. Conclusions and discussion

A compartment model has been developed to predict the activity concentration in *pasture-cow-milk* exposure route. A more complete model is also described for radium distribution, retention and elimination within the cow by including the sub-compartments affected by these processes: GIT, plasma and bones.

The important routes of contamination have been identified as bases for determining the modeling approach and pasture intake was considered to be a major source of radium excreted in milk (Kirchmann *et al*, 1972).

There are some research topics that should be addressed in order to obtain a more realistic quantification of radium transport in food chain than is currently possible, in the absence of site-specific data.

The parameters independent of the radionuclide, measures environmental and ecological characteristics which vary from site to site and also with the spatial scale considered. These parameters related to vegetation, soil and fauna characteristics, can be directly obtained from site investigations or estimated with simple models.

The parameters dependent of the radionuclide are related with processes responsible for differences in radionuclides distribution in the compartments, their retention and elimination from the system. Most of these parameters present a substantial data gaps. Some of these gaps could be filled with data obtained from on-going site investigation. However, we should be aware that these experimental data will always and only represent a limited set of environmental conditions. For example, plant uptake of radium has been proven to occur on a number of radium contaminated sites although the extent to which it occurs is variable. For a plant to take up radium, a soluble or exchangeable form of this radionuclide must be present (Baker *et al*, 2005). Without these conditions any direct contamination of the pasture surface will dominate the

activity concentration in the pasture. Processes such as root uptake and direct soil contamination will only be important when there is no direct deposition onto pasture surface (Teale *et al*; Watson *et al*, 1983).

The transfer model to animals requires further testing, which could be done by performing measurements of radionuclide concentrations in animals and in their feed. Literature documenting thropic transfer of radium from feed to animal products is not much and although there are numerous publications presenting radium content of milk and meat products from market basket surveys (Watson *et al*, 1983) most of literature does not contain the necessary information of radium concentration in the animal's diet from which the products were obtained.

Concentrations in the specific organs could be estimated from empirical measures ratios between concentrations in organs and in the whole body or with the help of more detailed kinetic models (Avila *et al*, 2006). The quantities that can be monitored during organism life include whole-body radium content, blood concentration, urinary and fecal excretion rate and milk secretion. Until now direct observation *in vivo* of radium retention in bone compartment has not been possible and what has been learned about it has been inferred from *postmortem* observations and with modeling studies (BEIR, 1988).

Acknowledgements

This work has been carried out with the financial support of Foundation for Science and Technology (FCT-MCES).

References

Avila, R., Facilia, A. B., Model of Long-Term Transfer of Radionuclides in Forests. Technical report TR-06-08. Swedish Nuclear Fuel and Waste Management Co. Sweden 2006. Journal of Radiological Protection 25, 127-140, 2005.

Baker, A. C., Toque C., A review of the potential for radium luminising activities to migrate in the environment. Journal of Radiological Protection 25, 127-140, 2005.

BEIR, Health Effects of Radon and Other Internally Deposited Alpha-Emitters, National Academy Press, Washington D.C., BEIR IV, Committee on the Biological Effects of Ionizing Radiations, 1988.

Falcão, J. M., Carvalho, F. P., Leite, M. R., Alarcão, M., Cordeiro, E., Ribeiro, J., MinUrar, Minas de Urânio e seus Resíduos: Efeitos na Saúde da População. Relatório científico I, 2005.

Hoffman, F.O. Bergstrom, U. et al., Comparison of Predictions from Internationally Recognizes Assessment Models fort the Transfer of Selected Radionuclides Through Terrestrial Food Chains. Nuclear Safety 25, 533:564, 1984.

IAEA (International Atomic Energy Agency), Handbook of parameters values for the prediction of radionuclide transfer in temperate environments – produced in collaboration with the International Union of Radioecologists, Vienna, Technical Report 364, IAEA 1994.

IAEA, Biomass 1, Modelling the migration and accumulation of radionuclides in forest ecosystems. Report of the Forest Working Group of the Biosphere Modelling and Assessment (Biomass) Programme, Theme 3, 2002.

IAEA, Biomass 7, Testing of environmental transfer models using data from the remediation of a radium extraction site. Report of the Remediation Assessment Working Group of Biomass Theme 2, 2004.

Kirchmann, R., LaFontaine, A., Van den Hoek, J. and Koch, G., Comparison of the rate of transfer to cow milk of ^{226}Ra from drinking water and ^{226}Ra incorporated in hay. Comptes Rendus des Seances de la Societe de Biologie et de ses Filiales 166(11): 1557-1562, 1972.

Leggett, R. W and Eckerman, K. F., Dosimetric Significance of the ICRP's Updated Guidance an Models, 1989-2003, and Implications for U. S. Guidance. Oak Ridge National Laboratory, 2003. ORNL/TM-2003/207.

Leggett, R. W., Eckerman, K. F. et al, Age-specific Models for Evaluating Dose and Risk from Internal Exposures to Radionuclides. Oak Ridge National Laboratory, 1987. ORNL/TM-10080.

Teale, J. B., Modelling Approach for the Transfer of Actinides to Fruit Species of Importance in the UK. NPRB-W46, 2003.

Watson, A. P., Etnier, E. L. and McDowell-Boyer, L. M., Radium-226 in Drinking Water and Terrestrial Food Chains: A Review of Parameters and an Estimate of Potential Exposure and Dose. Oak Ridge National Laboratory, 1983. ORNL/TM-8597.