UNIVERSITY OF WALES

INSTITUTE OF NON-NEWTONIAN FLUID MECHANICS

PROCESS MODELLING
25 - 27 MARCH 2002

PROGRAMME

Monday 25 March - Afternoon

12:00 Registration and Lunch

Session 1 *Chairman: K Walters*

14:15 - 14:55 H M Laun
Viscoelastic FEM simulations in an industrial polymer research laboratory

14:55 - 15:35 J C Hyun
Nonlinear dynamics and a stabilization of film casting process

15:35 - 16:00 Coffee/Tea

Session 2 *Chairman: P Rh Williams*

16:00 - 16:40 F P T Baaijens
Numerical analysis of flow mark surface defects in injection molding flow

16:40 - 17:10 F T Pinho
Non-Newtonian fluid mechanics and computational rheology at the Universities of Porto and Beira Interior, Portugal

17:10 - 17:30 P J Oliveira
Developments in finite volume methods applied to computational rheology

17:30 - 17:50 S S Edussuriya
Towards a viscoelastic model of the encapsulation process in flip-chip packaging

19:30 Dinner

NON-NEWTONIAN FLUID MECHANICS AND COMPUTATIONAL RHEOLOGY AT THE UNIVERSITIES OF PORTO AND BEIRA INTERIOR, PORTUGAL

F. T. Pinho [1] and P. J. Oliveira [2]

[1] CEFT-Centro de Estudos de Fenómenos de Transporte, DEMEGI
Faculdade de Engenharia, Universidade do Porto, Rua Dr. Roberto Frias
4200-465 Porto, Portugal, (fpinho@fe.up.pt)
[2] Departamento de Engenharia Electromecânica, Universidade da Beira Interior
Rua Marquês, D'Ávila e Bolama, 6201-001 Covilhã, Portugal, (pjpo@ubi.pt)

This presentation is organised in two parts to be presented by authors 1 and 2, respectively.

In Part one we describe in general the breadth of activities on non-Newtonian Fluid Mechanics and Computational Rheology carried out at the University of Porto, at Porto, and the University of Beira Interior at Covilhã. This includes, amongst other things, experimental work on turbulent wall and wall-free flows of polymer solutions, flows in mixing vessels, turbulence model developments for drag reducing fluids, non-Newtonian laminar flow in annuli and analytical solutions for fluid flow and heat transfer in ducts with the PTT model. Naturally, we also outline our major contributions to the development of a finite-volume code that is capable of three-dimensional time-dependent viscoelastic computations in non-orthogonal, colocated meshes using high resolution schemes.

Part two is dedicated to a more in-depth look into our work on Computational Rheology to emphasize the robustness, accuracy and capabilities of our methods. We will show recent results for the flow around a confined cylinder, the handling of viscoelastic multimode models, improvements in transient flow calculations and the simulation of the benchmark planar 4:1 sudden contraction flow with more than 1 million DOF.

NON-NEWTONIAN FLUID MECHANICS AND COMPUTATIONAL RHEOLOGY AT THE UNIVERSITIES OF PORTO AND BEIRA INTERIOR PORTUGAL

F T Pinho
CEFT- Transport Phenomena Research Center, Mechanical Engineering Dept.
Faculty of Engineering, University of Porto, Rua Dr. Roberto Frias s/n
4200-465 Porto, Portugal, fpinho@fe.up.pt

P J Oliveira
Electromechanical Engineering Dept., University of Beira Interior
Rua Marquês D'Ávila e Bolama, 6201-001 Covilhã, Portugal, pjpo@ubi.pt

Wales, 25-27th March 2002

Part I- Past Activities

1990-1995

1) Turbulent pipe flow (Exp)

1995-1998

1) Turbulent wall-free flows; collaboration w/ Liverpool

2) Development of first FV code for UCM

1998-Present

1) Turbulent wall-free flows; collaboration w/ Liverpool

2) Stirred vessel flows

3) High-resolution methods

4) Accurate time-dependent calculations (UBI only)

5) Temperature, free-surface (under dev-U Minho)

6) Analytical viscoelastic solutions

7) Turbulence models (collab w/ Brasil- UFPa)

Part II- Recent developments and results in Computational Rheology

1) Turbulent pipe flow

Tylose MH10000K
(low molecular weight)

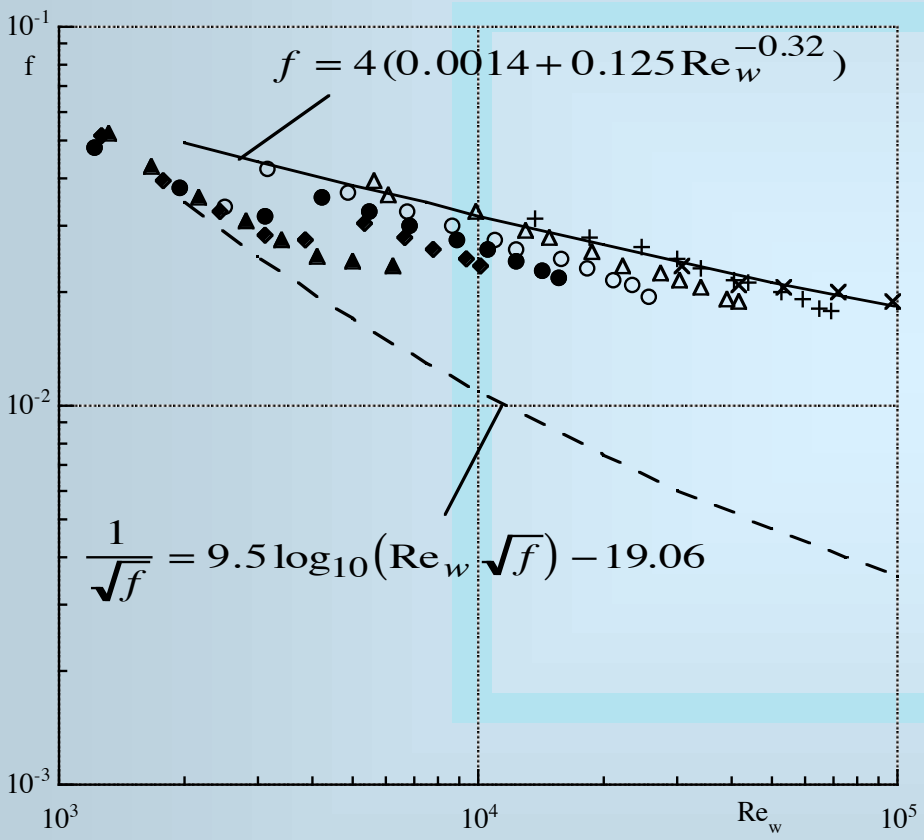

0.1% to 0.6% in 0.1% steps

CMC 7H4C
(M=300,000)

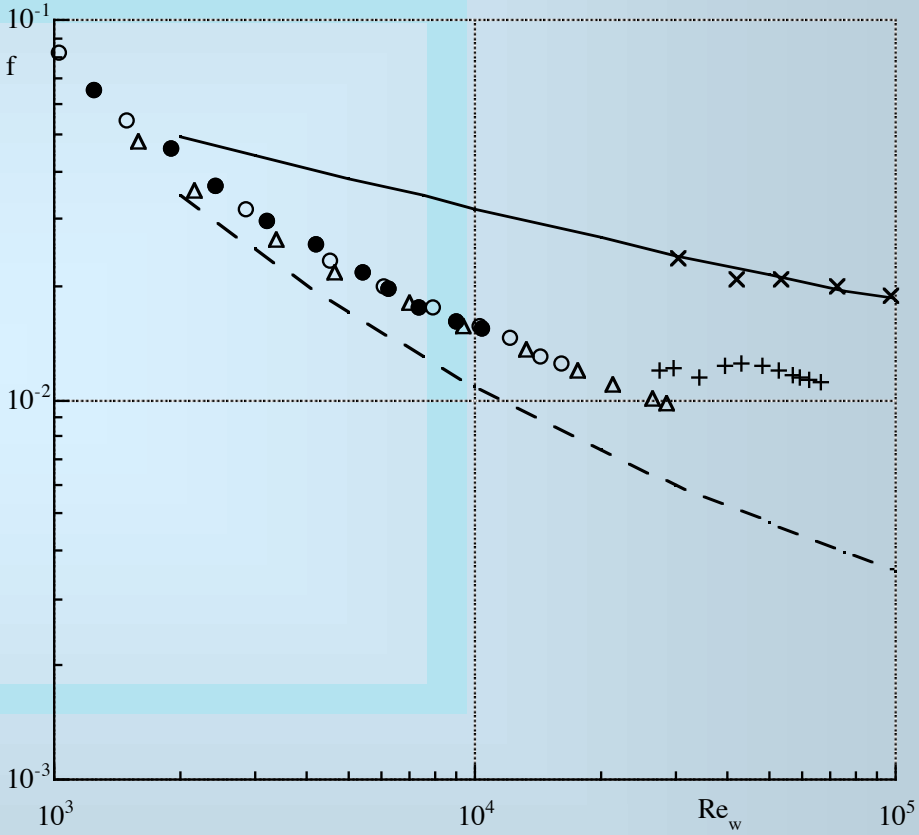

0.1% to 0.4% in 0.1% steps

XG keltrol TF
(M=2,000,000)

Laponite (2002)

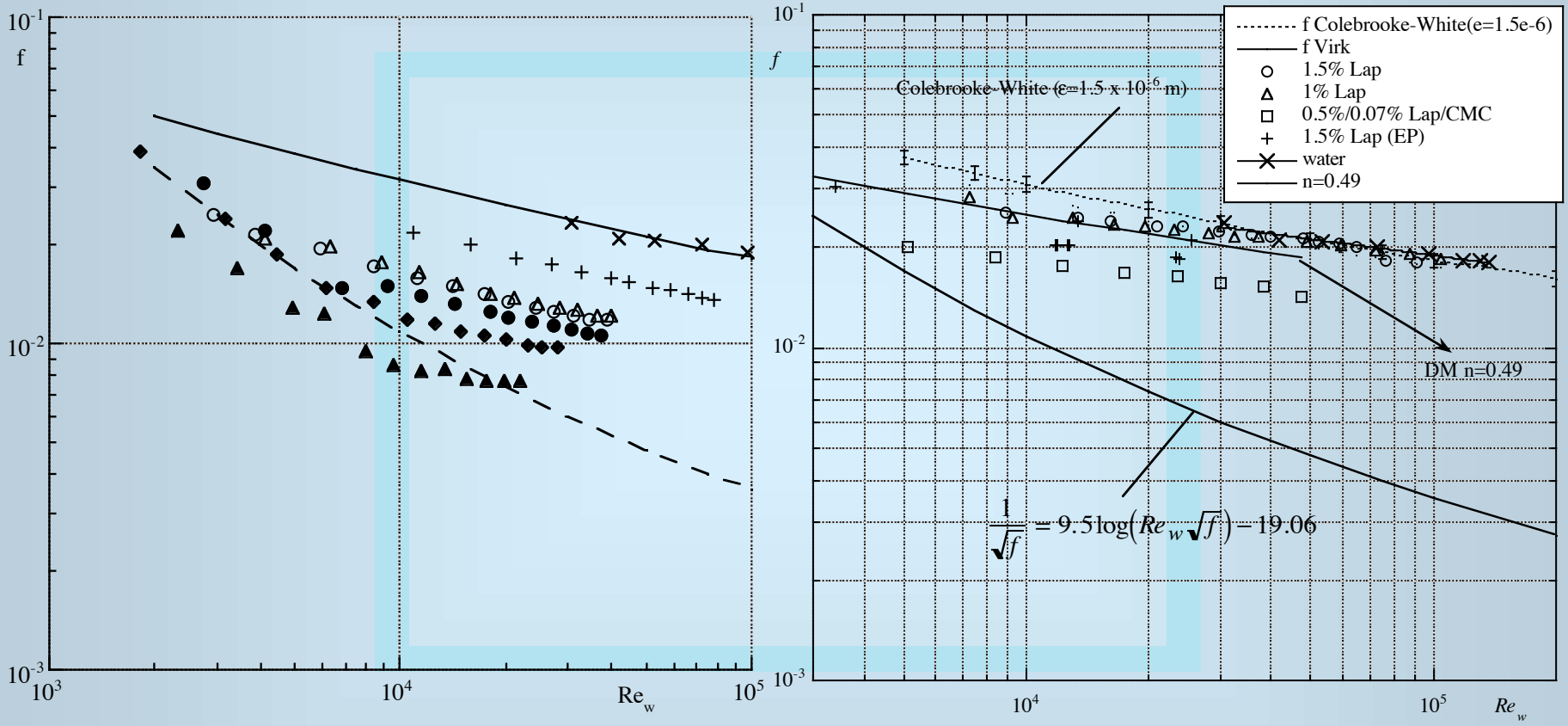

0.05% to 0.25% in steps of 0.05%

- More understanding of DR flows;

- Need to measure wall-free flows;
- Urgent need to develop turbulence models for viscoelastic fluids.
  Must be a coupled rheological/turbulence model so that input is flow condition and fluid properties, exclusively

- Collaboration with Univ. of Liverpool on:
  Rheological characterisation (opposed jet rheometer);
  Complementary measurements of pipe flow
  Complementary measurements in wall-free flows (sudden exp.)

  DATA BASE

  Numerical simulations in annular flow (laminar flow)

2) Turbulent wall-free flows

→ Long inlet pipe: Univ. Porto

→ Contraction at inlet: Univ. Liverpool

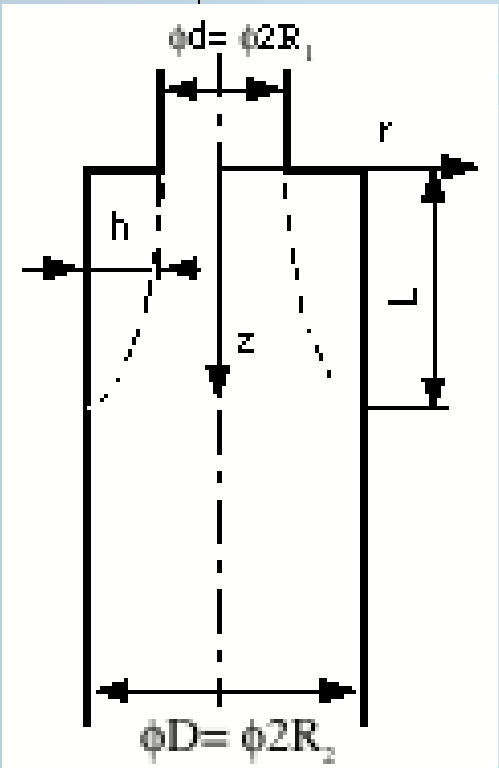

d = 26 mm
D = 40 mm
h = 7 mm
L - recirculation bubble length

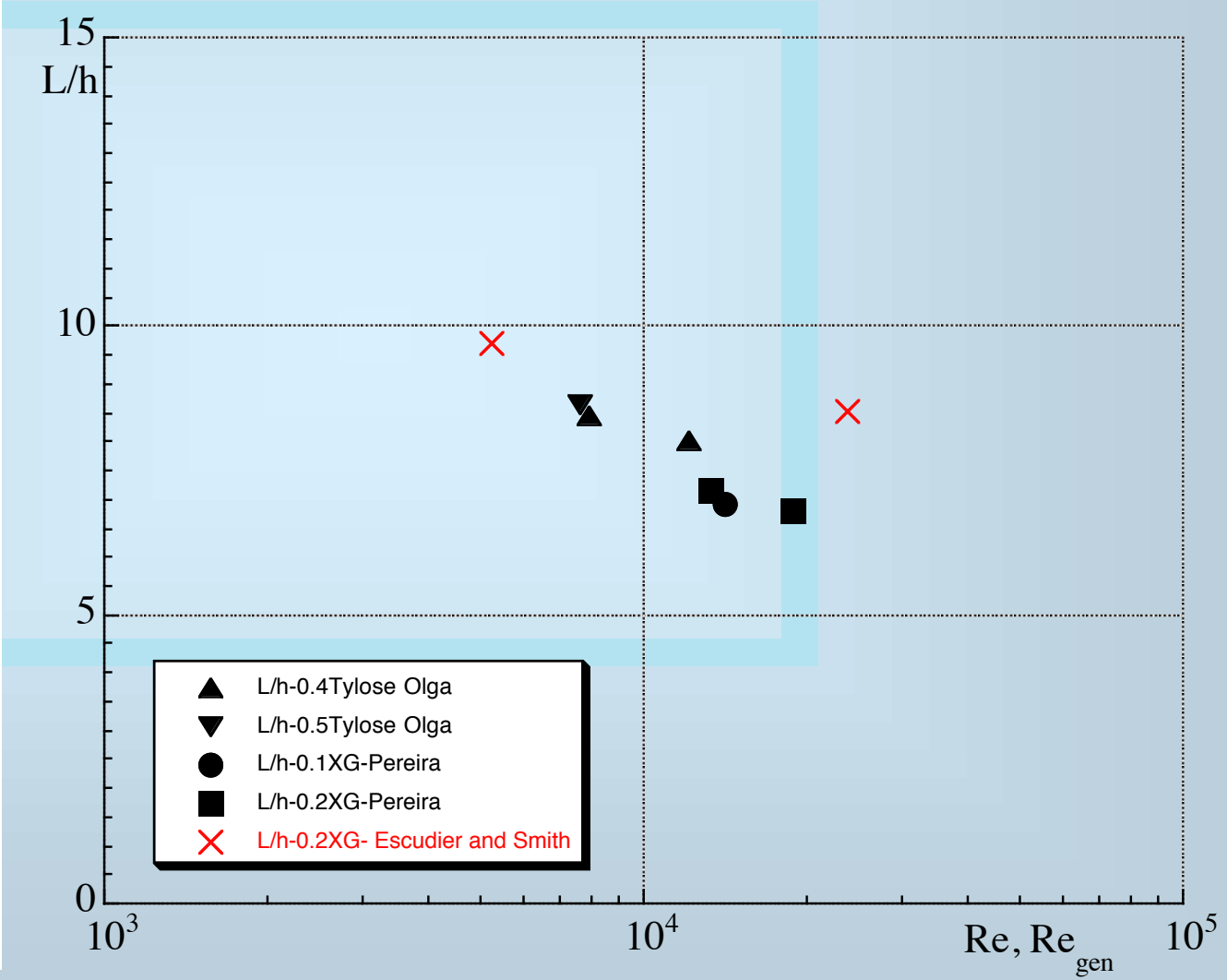

- Most important effect is upstream flow characteristics;
- Drag reduction in upstream pipe affects wall region;
- Wall turbulence advected downstream reduces turbulence in wall-free shear layer $\longrightarrow$ reduction in recirculation

3) Other experimental studies

I) Power consumption of polymer solutions in stirred vessels powered by hyperboloid impellers

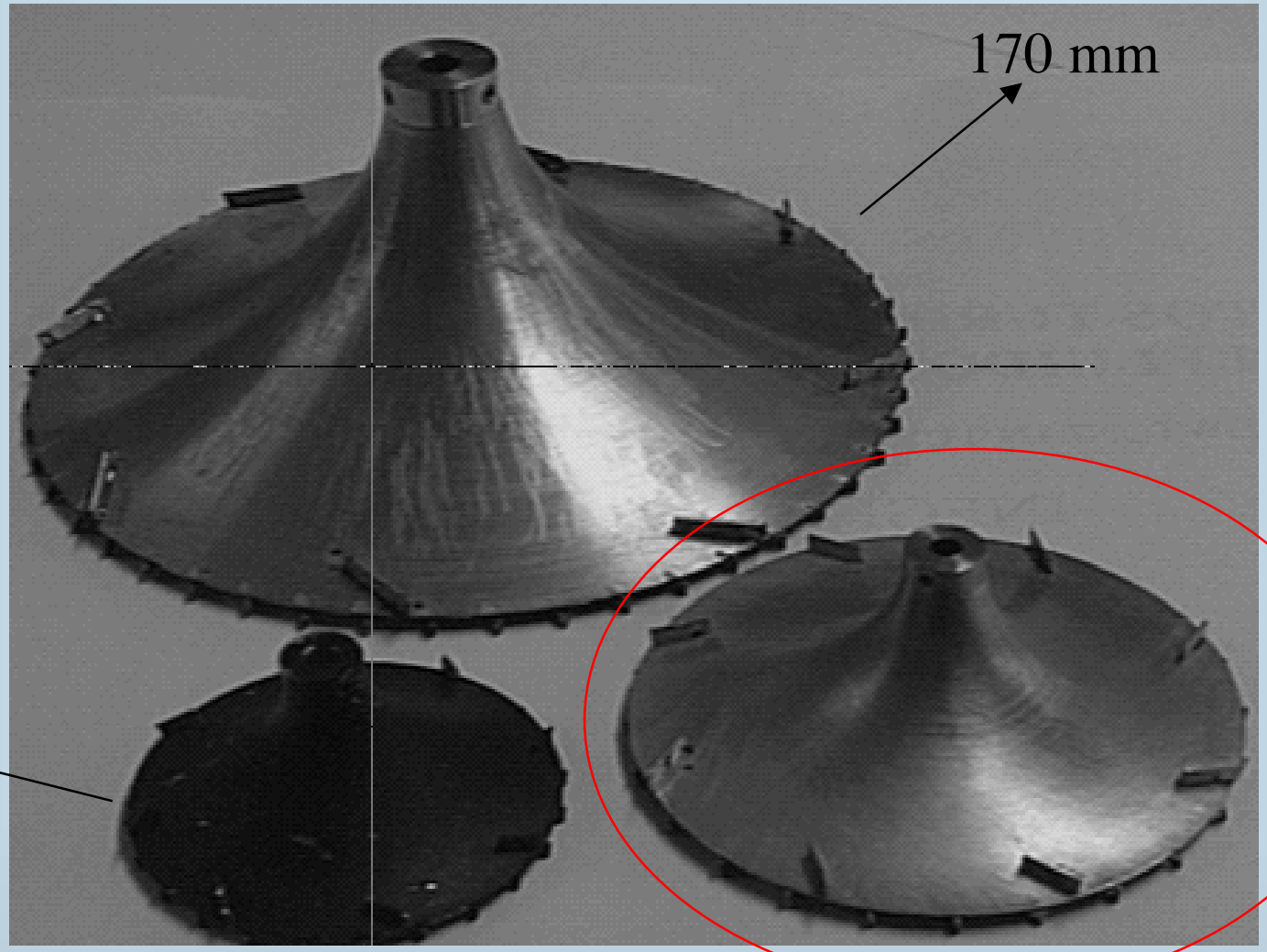

$$\dot{\gamma} = kN \longrightarrow \eta_c$$

$$\mathrm{Re} = \frac{\rho N D^2}{\eta_c}$$

$k = 48 \pm 16$

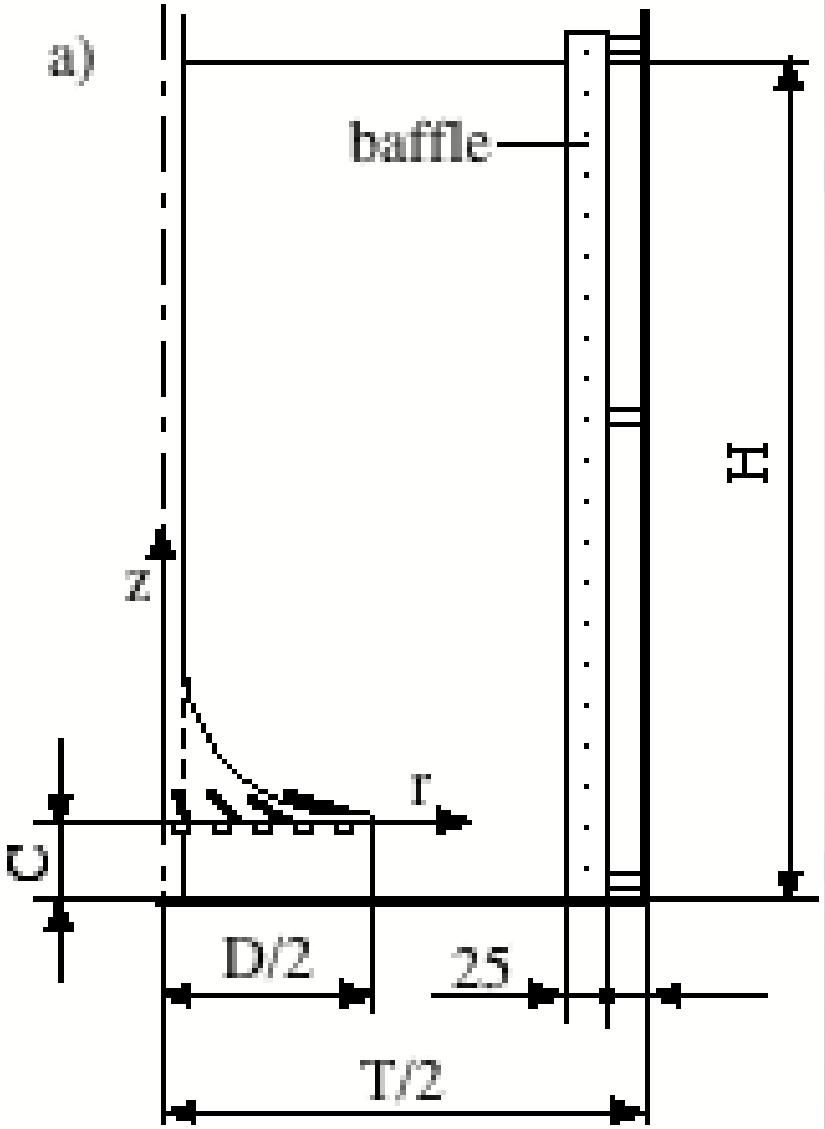

XG

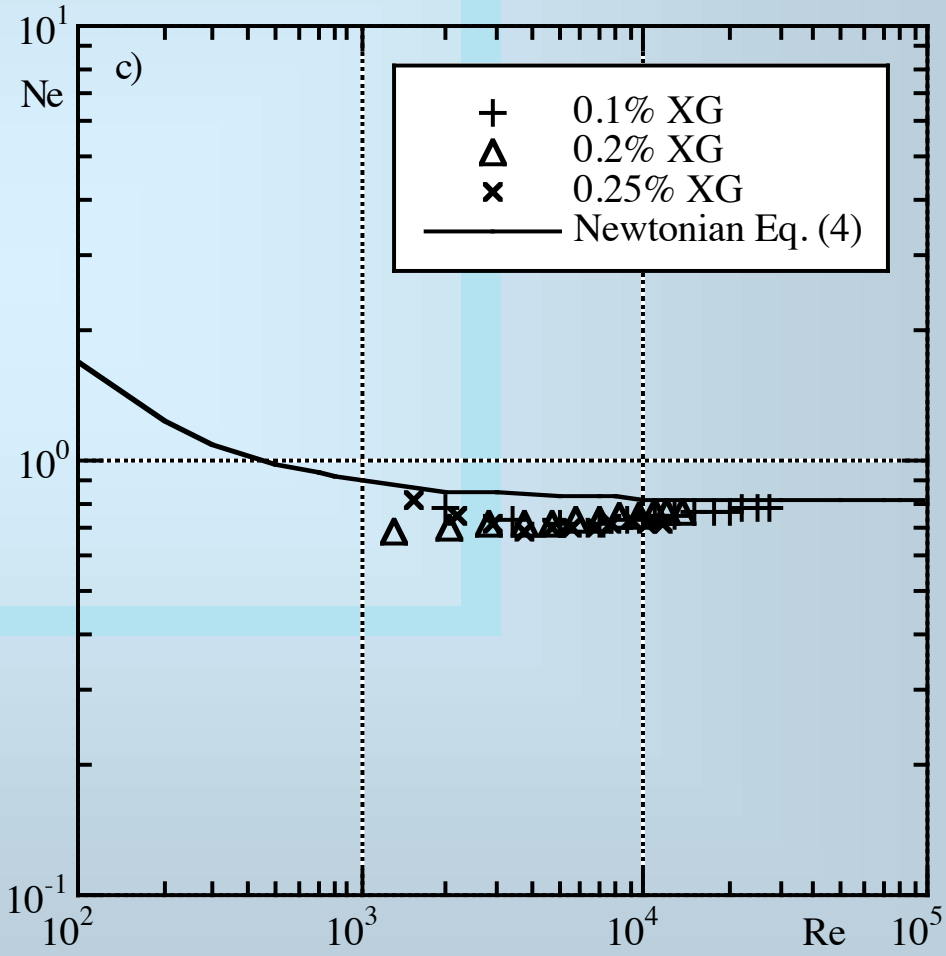

- Next step: pumping capacity (exp done);

- Some turbulence measurements to characterize mixing;

- Effect of aeration;

- Mixing time;

II) Slug flows: CEFT-Alexandra Pinto

Wake Structure on slug flow with CMC solutions

CMC concentration (%)

0.10 0.20 0.30 0.35 0.40 0.50 0.55 0.60 0.80 1.0

turbulent (open) wake

laminar (closed) wake

III) Membrane flows: confined jets

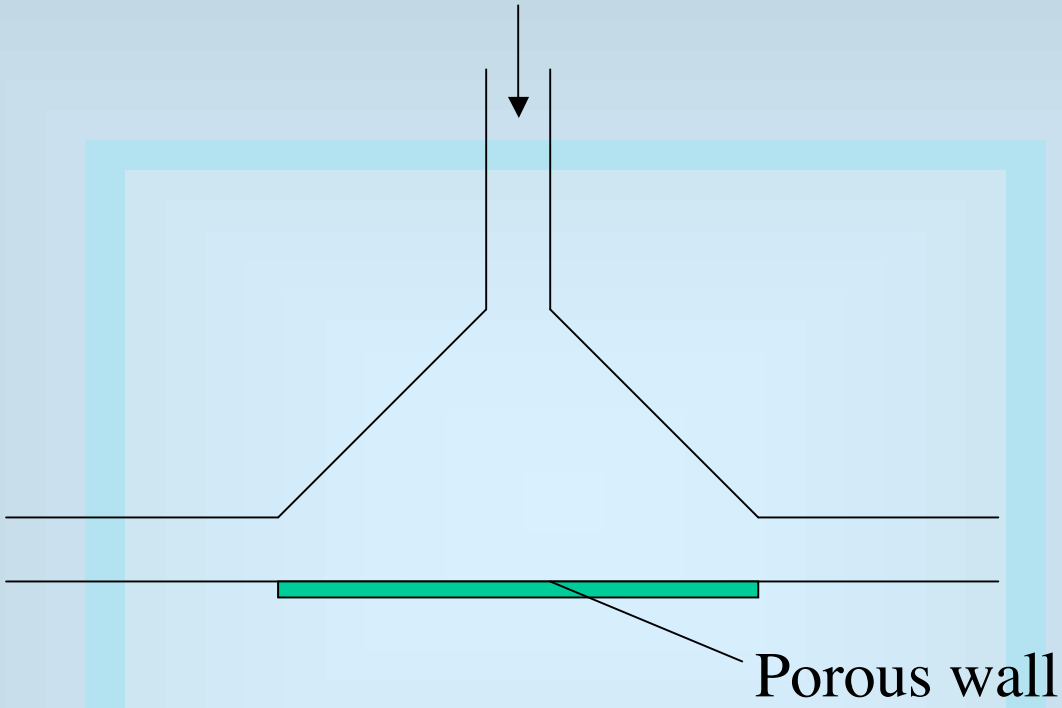

- Investigation of 2-D and axisymmetric cases;
- Non-Newtonian fluids;
- Numerical investigations;
- Laminar and turbulent flows;

4) Computational Rheology

I) 3-D, FV viscoelastic code

Stress- velocity coupling

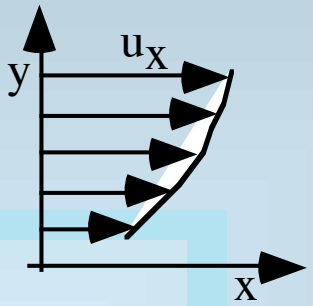

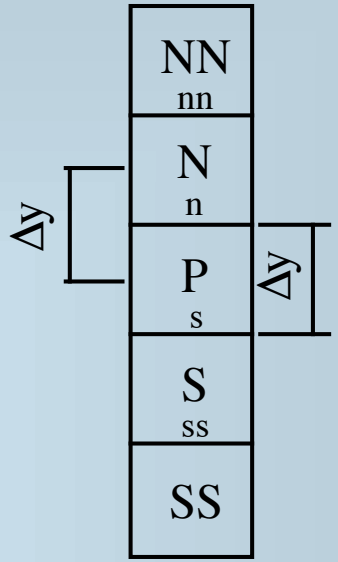

$$\left(\frac{\partial \tau_{xy}}{\partial y}\right)_{\mathrm{P}} = \frac{\tau_{xy,\mathrm{n}} - \tau_{xy,\mathrm{s}}}{\Delta y} = \frac{1}{\Delta y}\left[\frac{\tau_{xy,\mathrm{N}} + \tau_{xy,\mathrm{P}}}{2} - \frac{\tau_{xy,\mathrm{P}} + \tau_{xy,\mathrm{S}}}{2}\right] = \frac{1}{2\Delta y}\left[\tau_{xy,\mathrm{N}} - \tau_{xy,\mathrm{S}}\right]$$

For a Newtonian fluid:

$$\left(\frac{\partial \tau_{xy}}{\partial y}\right)_{\mathrm{P}} = \frac{\eta}{4\Delta y^2}\left[u_{x,\mathrm{NN}} - 2u_{x,\mathrm{P}} + u_{x,\mathrm{SS}}\right]$$

Correct discretization is:

$$\left(\frac{\partial \tau_{xy}}{\partial y}\right)_{\mathrm{P}} = \eta\frac{\partial^2 u_x}{\partial y^2} = \frac{\eta}{\Delta y}\left[\left(\frac{\partial u_x}{\partial y}\right)_{\mathrm{n}} - \left(\frac{\partial u_x}{\partial y}\right)_{\mathrm{s}}\right] = \frac{\eta}{\Delta y^2}\left[u_{\mathrm{x,N}} - 2u_{\mathrm{x,P}} + u_{\mathrm{x,S}}\right]$$

Solution:

$$\tilde{\tau}_{ij,\mathrm{f}} = \frac{\overline{a_{\mathrm{P}}^{\tau}\tau_{ij}} + \overline{b}_{fj}[\Delta u_i]_f^f + \overline{b}_{fi}[\Delta u_j]_f^f - \left(\overline{b_{fj}[\Delta u_i]_f + b_{fi}[\Delta u_j]_f}\right)}{\overline{a_P^{\tau}}}$$

Momentum:

$$\frac{\partial}{\partial t}(J\rho u_i)+\frac{\partial}{\partial \xi_l}\left(\rho\beta_{lj}u_j u_i\right)-\frac{\partial}{\partial \xi_l}\left(\frac{\eta}{J}\beta_{\mathbf{l}j}\beta_{\mathbf{l}j}\frac{\partial u_i}{\partial \xi_l}\right)=-\beta_{li}\frac{\partial p}{\partial \xi_l}+\frac{\partial}{\partial \xi_l}\left(\beta_{lj}\tau_{ij}\right)+J\rho g_i-\frac{\partial}{\partial \xi_l}\left(\frac{\eta}{J}\beta_{\mathbf{l}j}\beta_{\mathbf{l}j}\frac{\partial u_i}{\partial \xi_l}\right)$$

(l= *l* and no summation over subscript l)

Constitutive equation:

$$J\tau_{ij}+\lambda\frac{\partial}{\partial t}\left(J\tau_{ij}\right)+\lambda\frac{\partial}{\partial \xi_l}\left(\beta_{lk}u_k\tau_{ij}\right)=\eta\left[\beta_{lj}\frac{\partial u_i}{\partial \xi_l}+\beta_{li}\frac{\partial u_j}{\partial \xi_l}\right]+\lambda\left[\left(\beta_{lk}\tau_{kj}\right)\frac{\partial u_i}{\partial \xi_l}+\left(\beta_{lk}\tau_{ki}\right)\frac{\partial u_j}{\partial \xi_l}\right]-\frac{2}{3}\eta\beta_{lk}\frac{\partial u_k}{\partial \xi_l}\delta_{ij}$$

Used for underrelaxation

Slip-stick: De=0.1, Re=20, LUDS

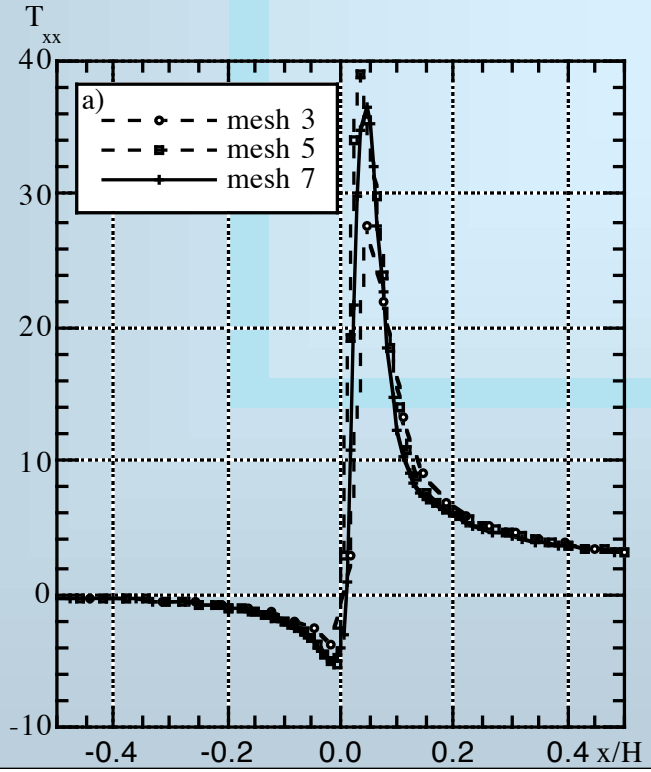

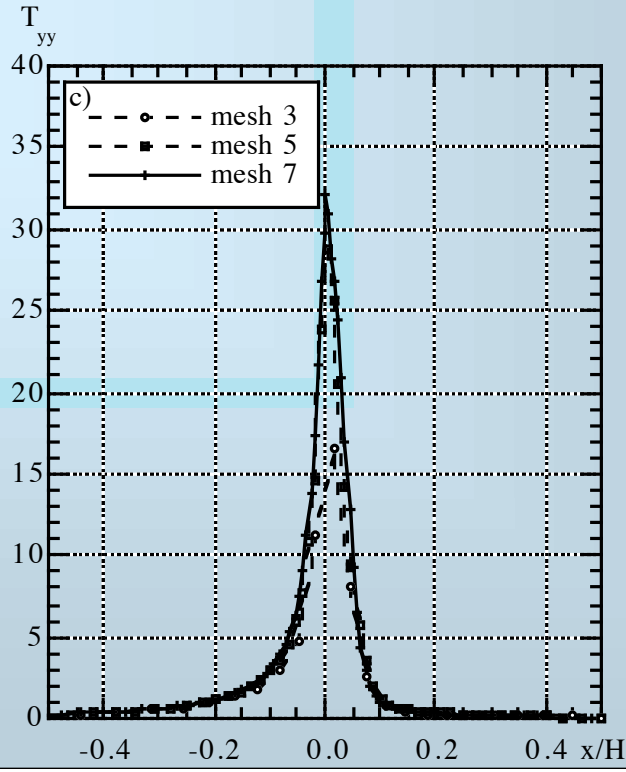

Re=1
De=1
LUDS

N_1

Streamlines

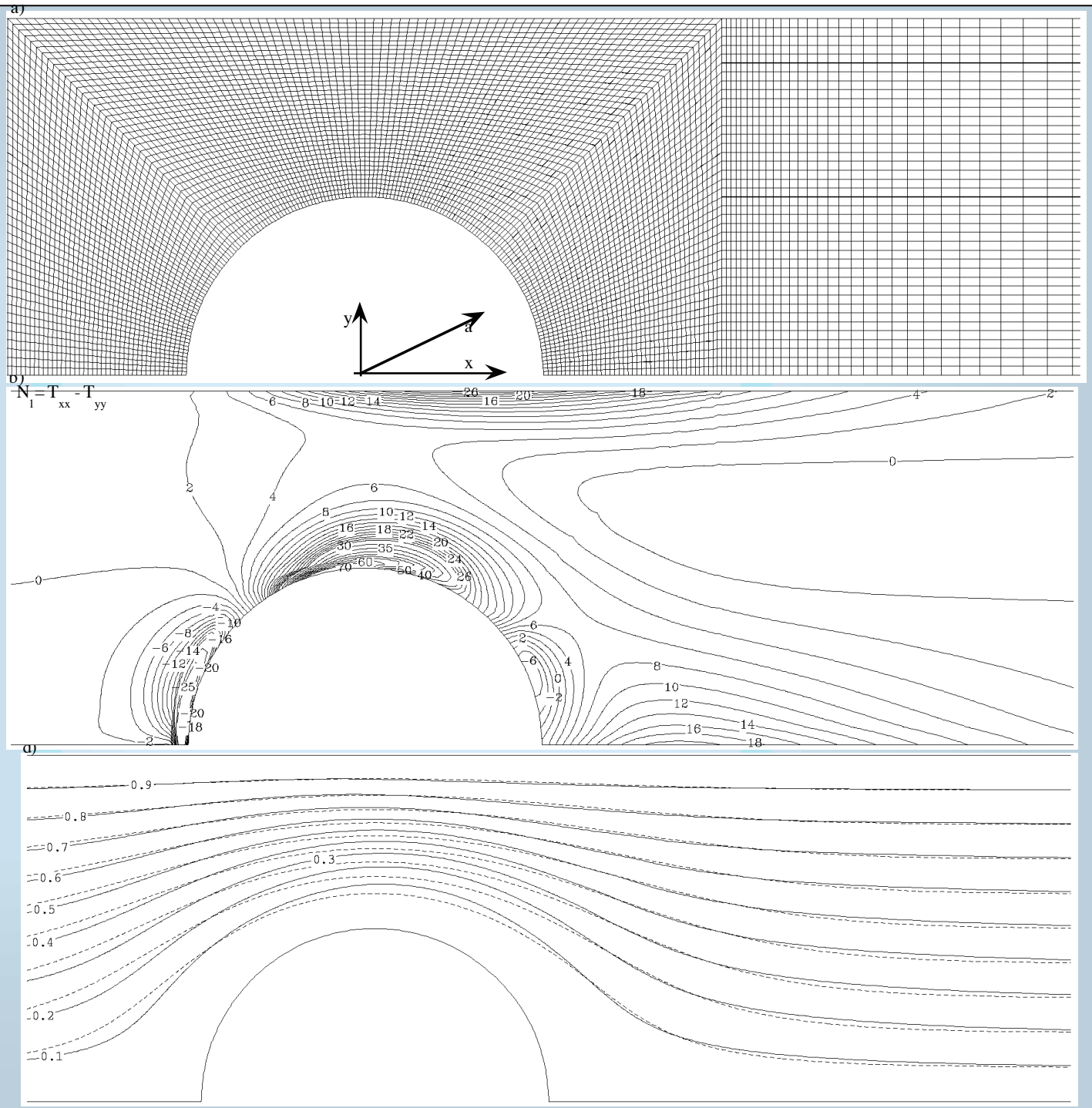

II) High resolution methods +deferred correction

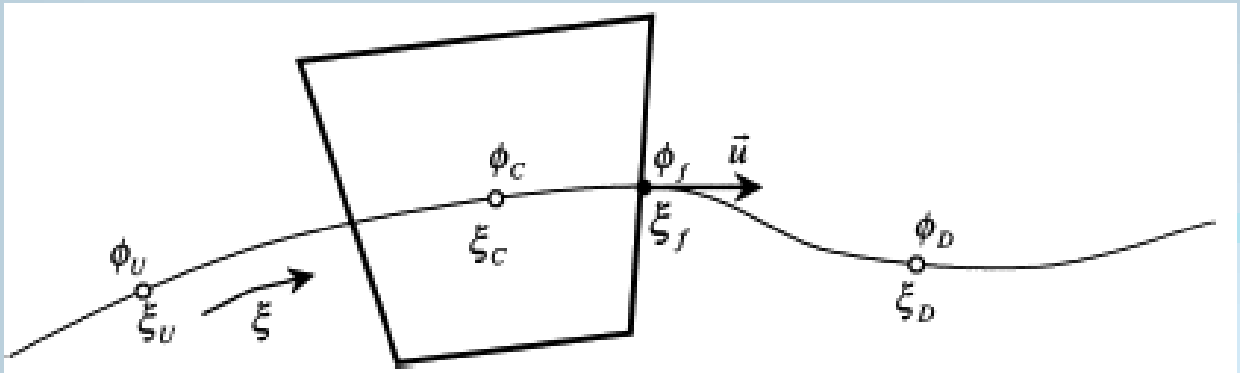

Fig. 1. Definition of local variables and co-ordinate system.

$$\hat{\phi} = \frac{\phi - \phi_U}{\phi_D - \phi_U}$$

$$\hat{\xi} = \frac{\xi - \xi_U}{\xi_D - \xi_U}$$

NVD

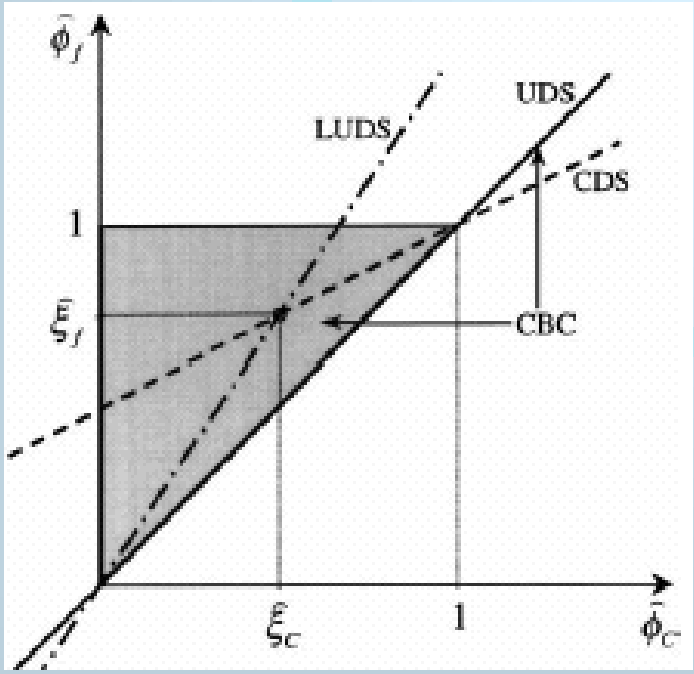

MINMOD=LUDS+ CDS+UDS

UCM, Re=0.01, MINMOD, Mesh with $\delta_{\min} = 0.01H_2$, 107 cells across upstream, 40 cells across downstream

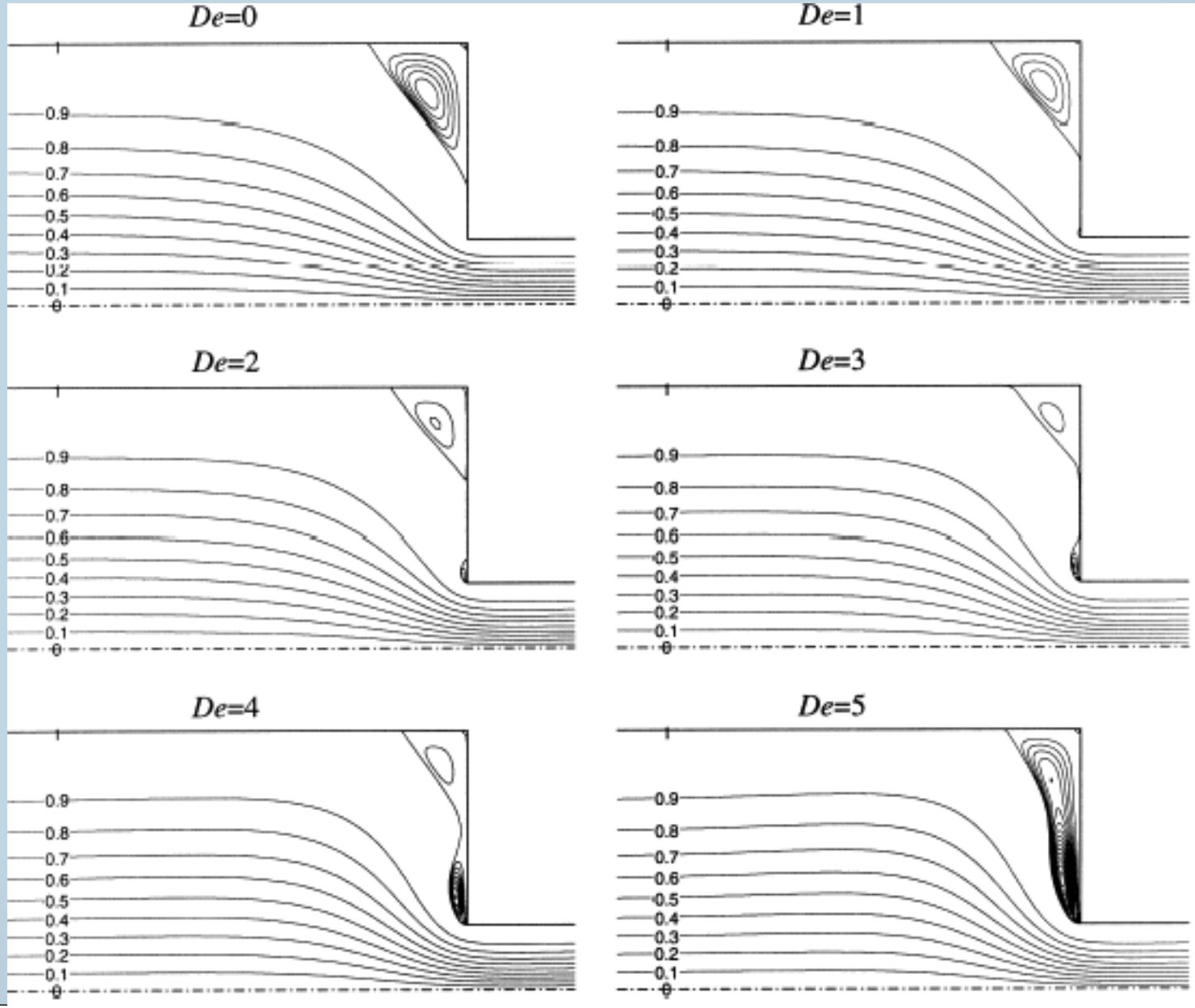

Re=0.01, De=0.3

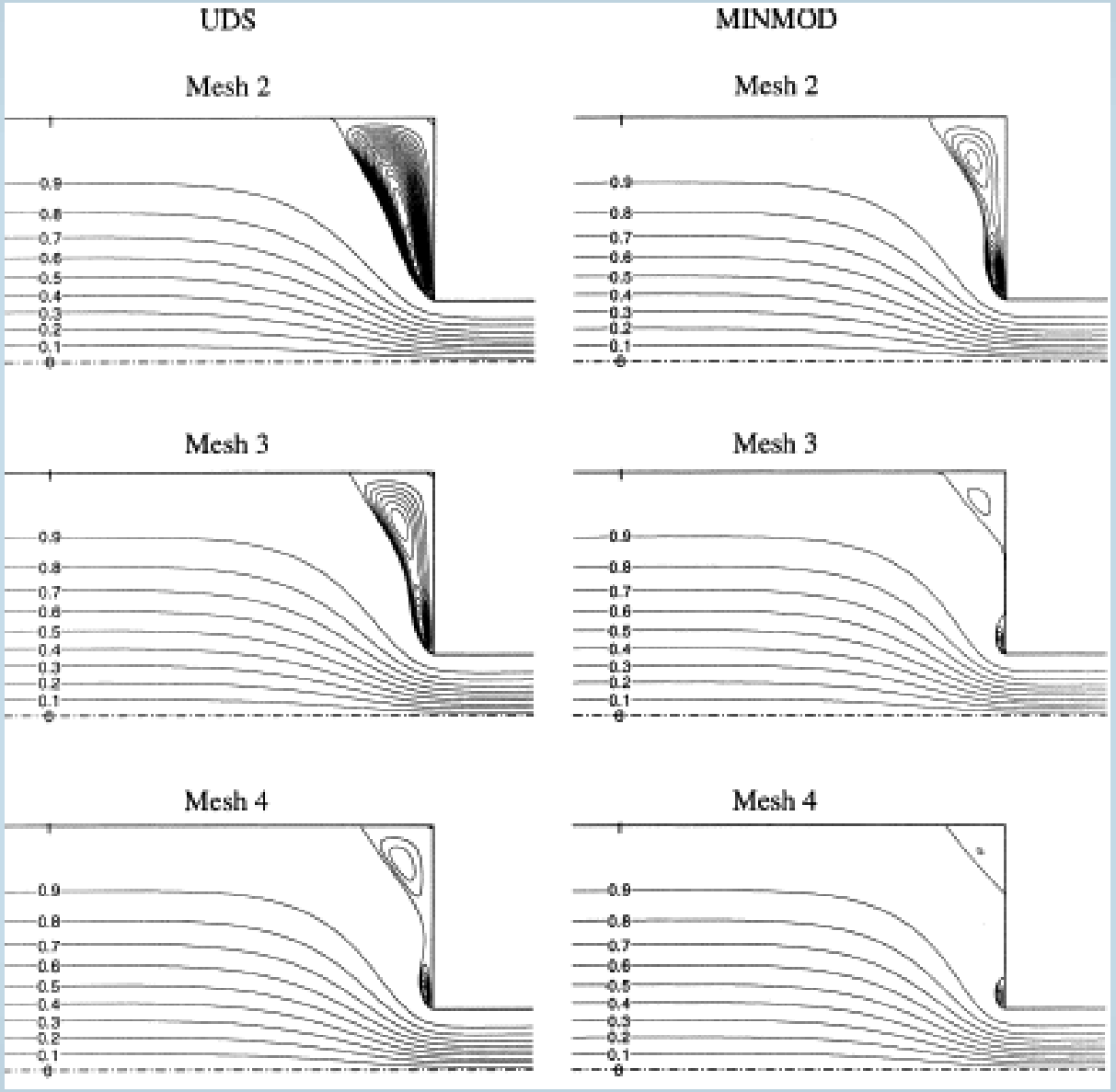

But, MINMOD has some convergence problems

III) High resolution: MINMOD and SMART, cylinder flow

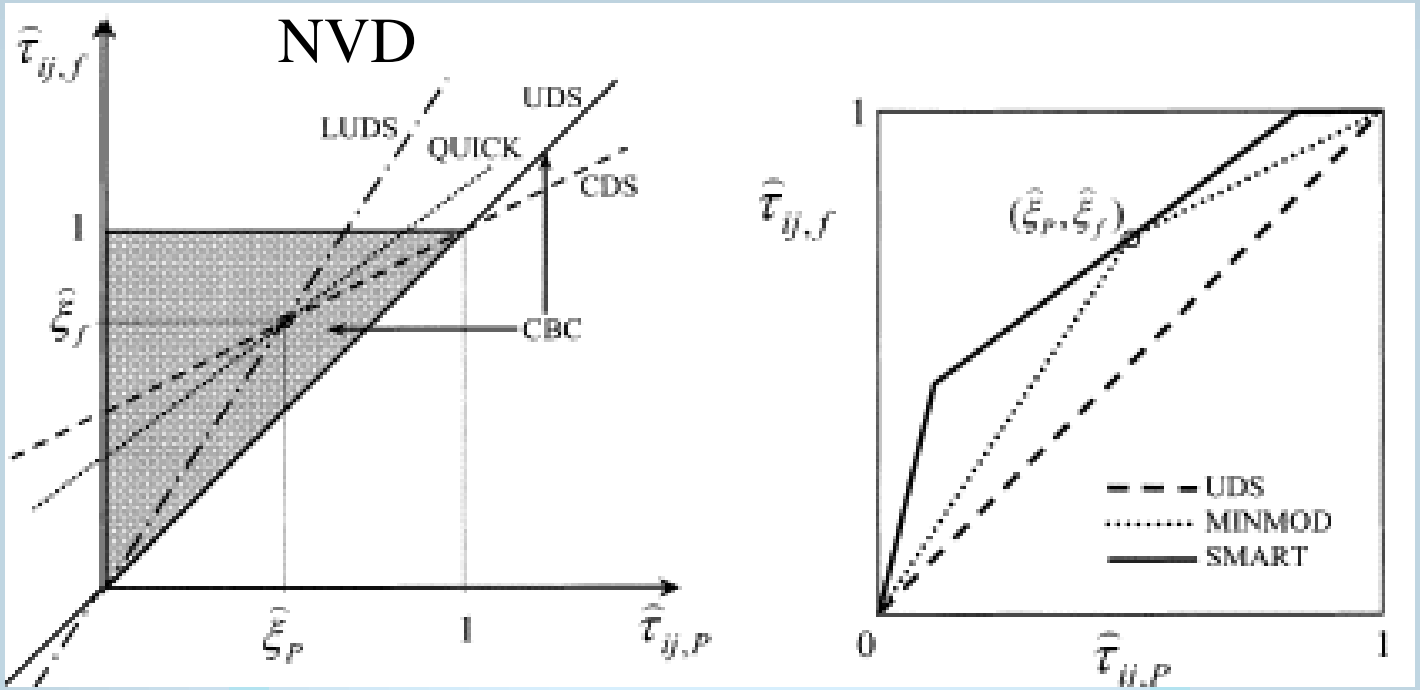

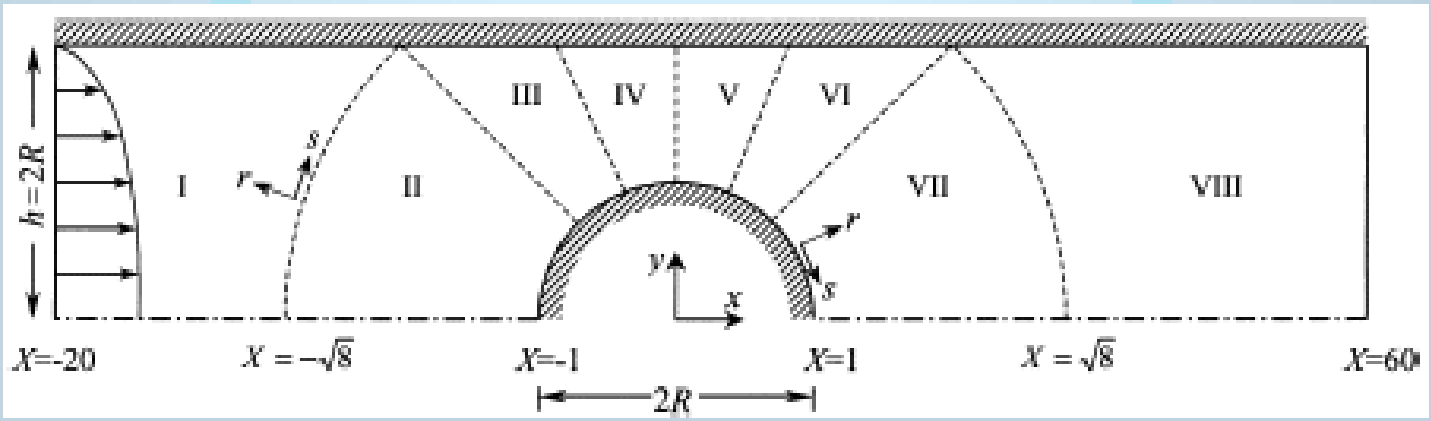

Fluids: Oldroyd-B and UCM

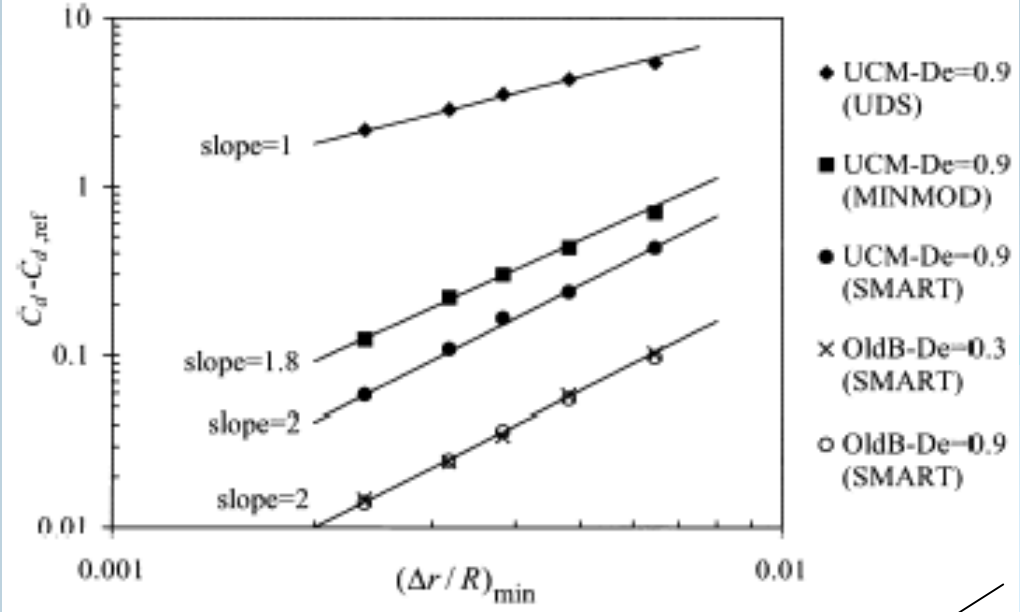

Fig. 4. Estimated error vs. minimum cell size.

UCM

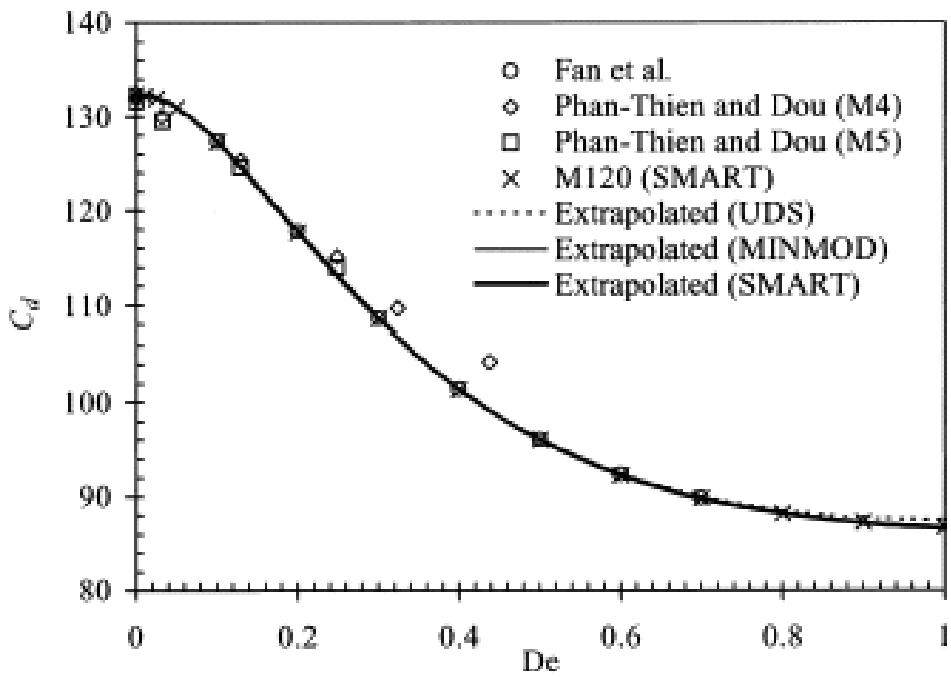

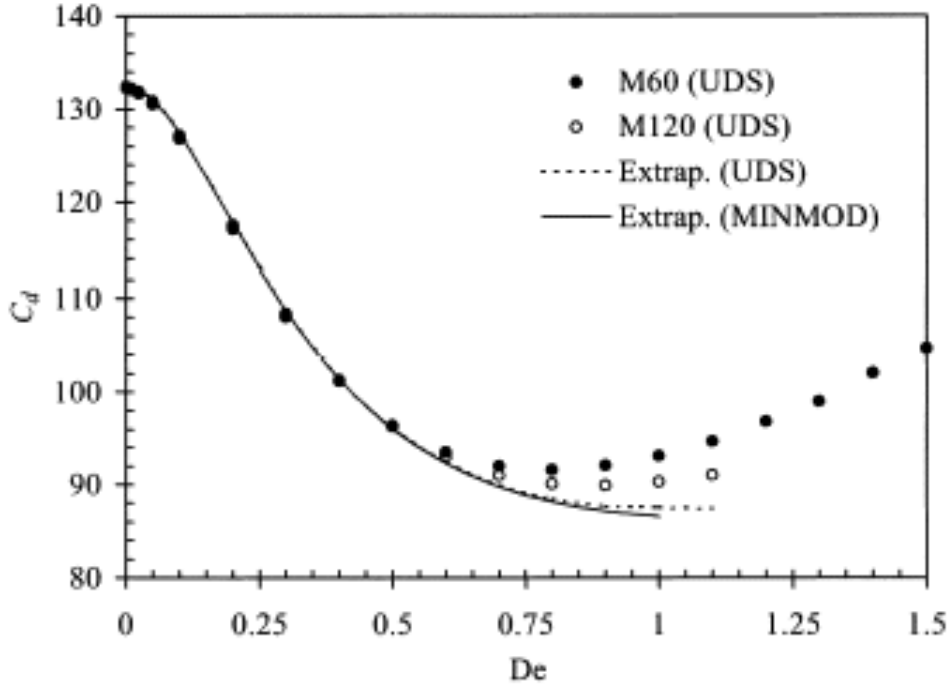

UCM →

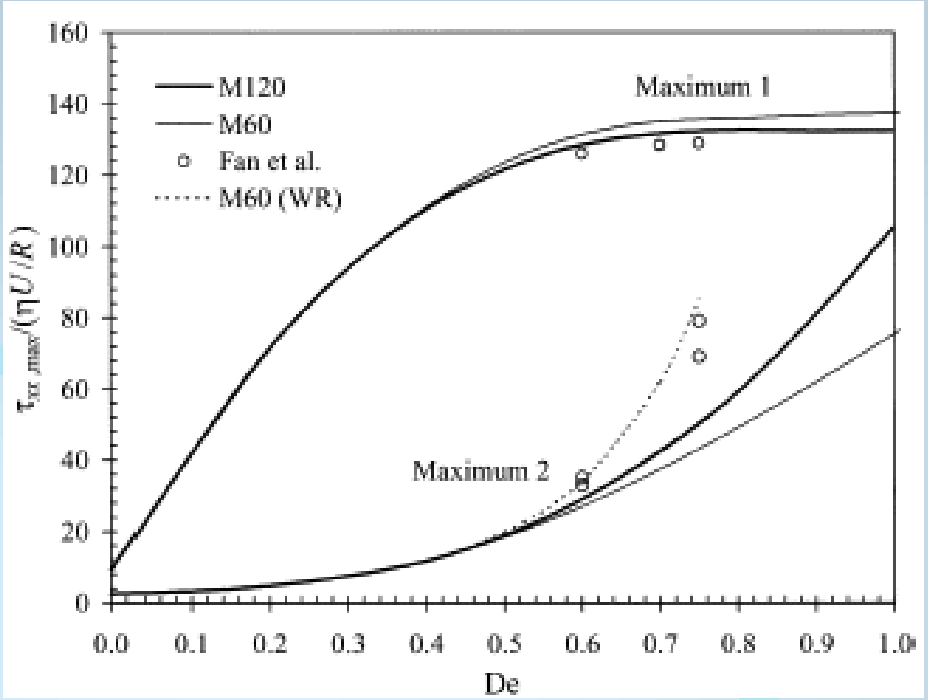

Oldroyd-B →

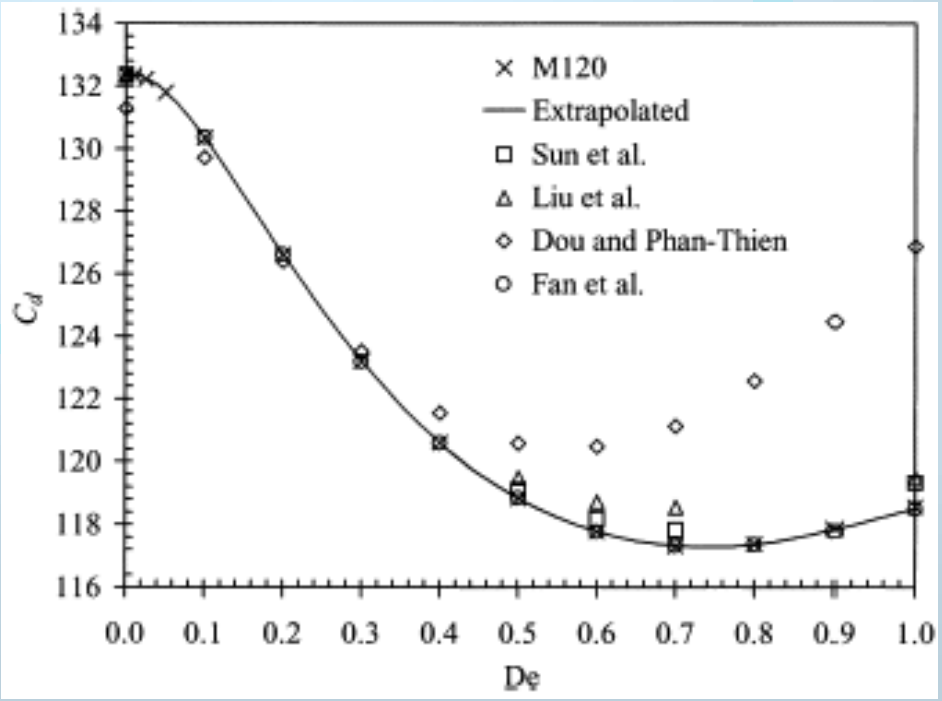

Oldroyd-B

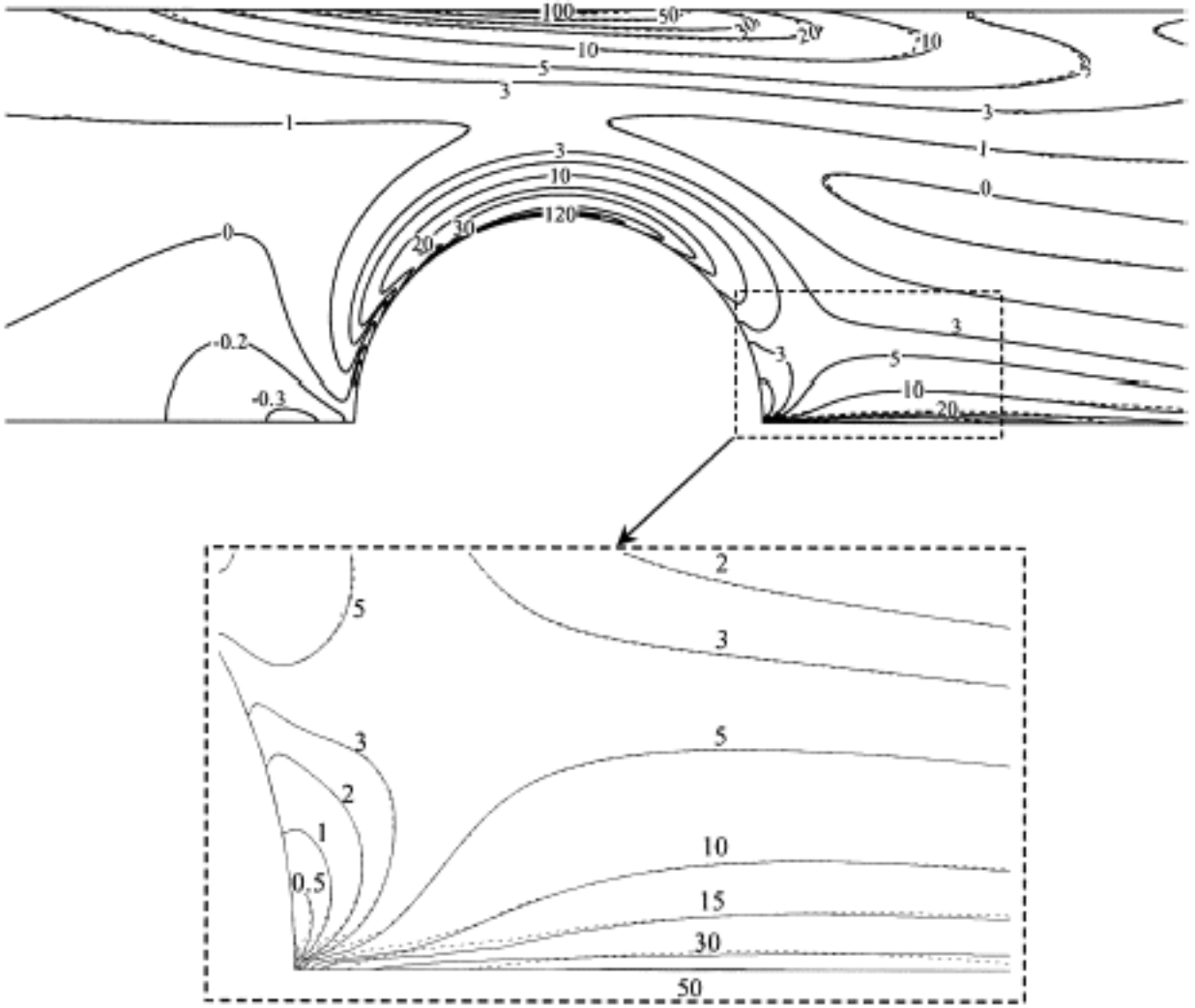

Fig. 16. Comparison of contours of the normal stresses (τ_{xx}) near the cylinder, predicted with mesh M60 (dashed line) and M120 (solid line), at $De = 0.9$.

IV) Automatic design of extrusion dies (in collaboration with University of Minho

Objectives:

-Maximum flow rate to avoid shark skin at die exit ;

-Maximum angle of convergence to avoid melt fracture;

- Correction of cross-section of parallel zone to anticipate post-extrusion effects;
- Flow balancing at exit to avoid internal stresses;
- Control of total pressure and of appearance of hotspots;

Work done:

- GNF;
- Integration of pre-processor, processor and post-processor;
- Flow balancing, draw-down and post-extrusion (two latter via correlations);
- Energy equation;
- Currently: free surface handling;

Case: extrusion of polypropilen homopolymer, NOVOLEN PPH 2150 from Targor, viscosity: Bird-Carreau

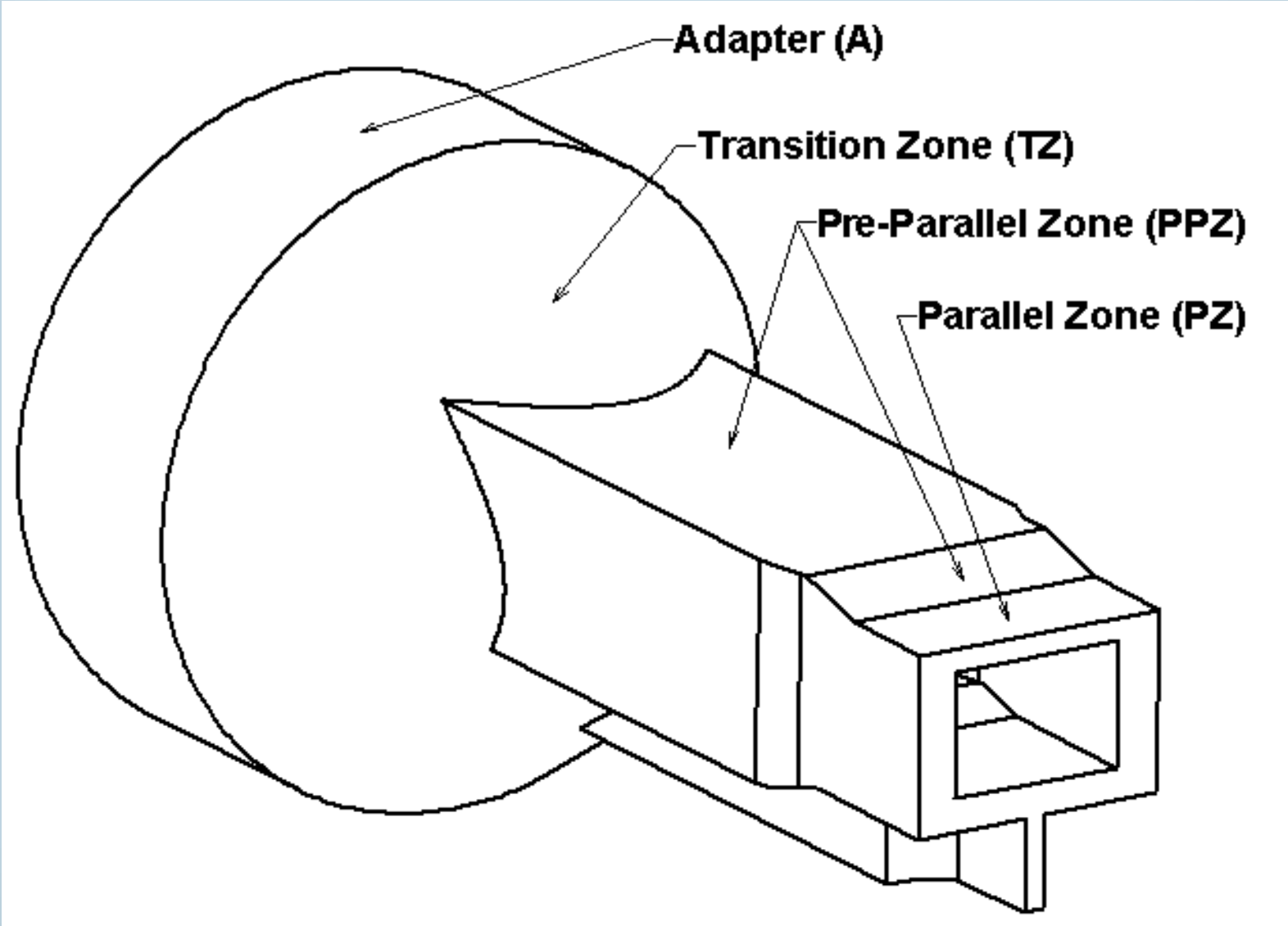

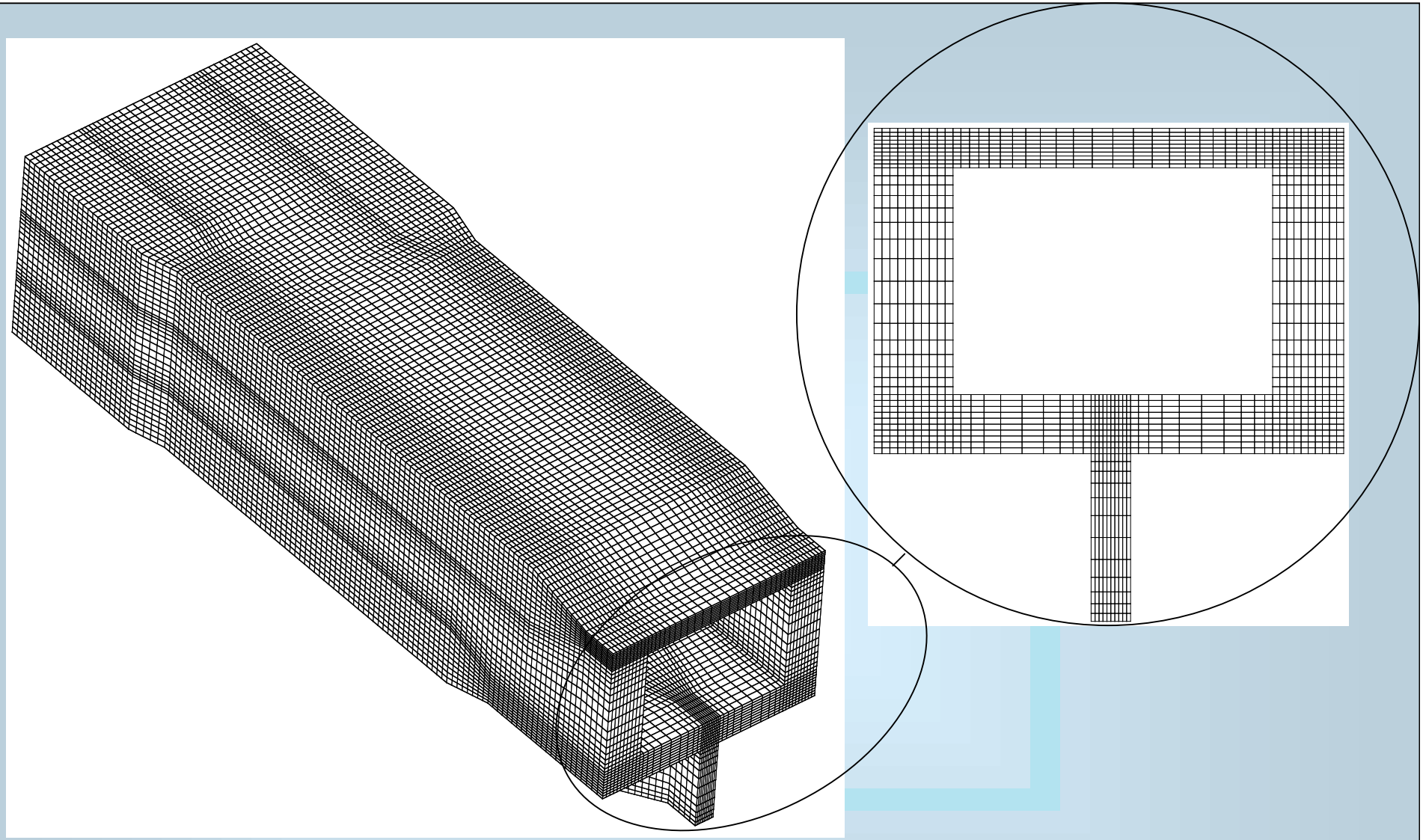

Pentium III at 933 MHz: 10 cells thick; 162 840 cells,
2 hour per iteration (mesh generation and flow calculation),
11 iterations for optimum objective function

Function objective

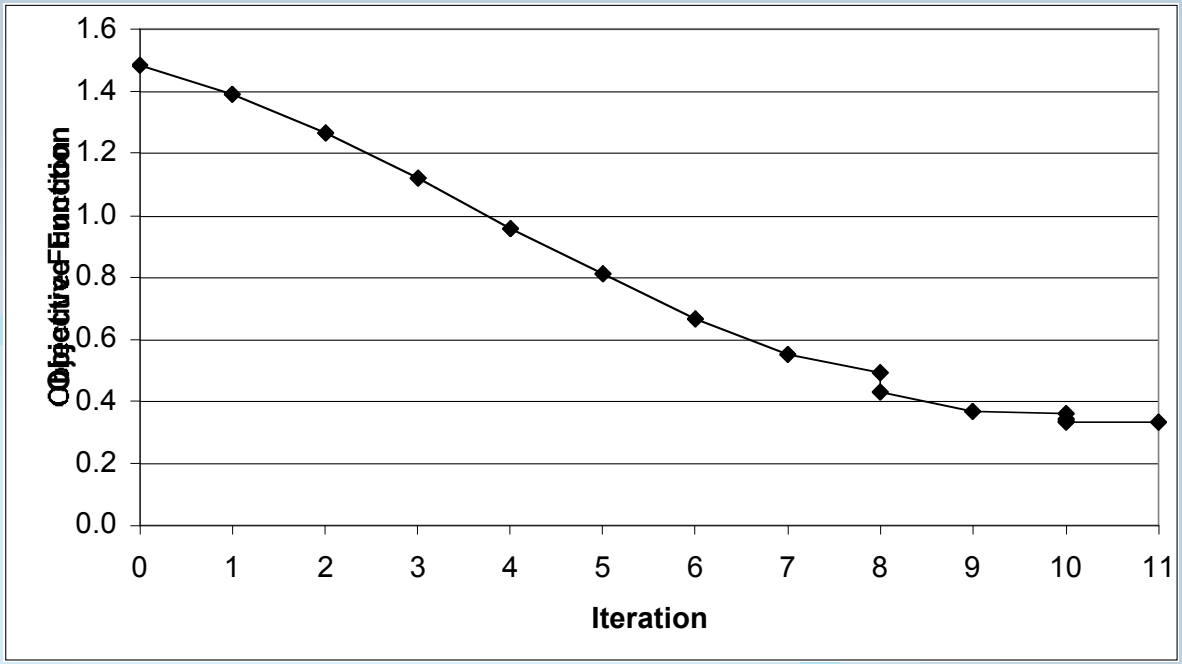

Relative velocity in each block

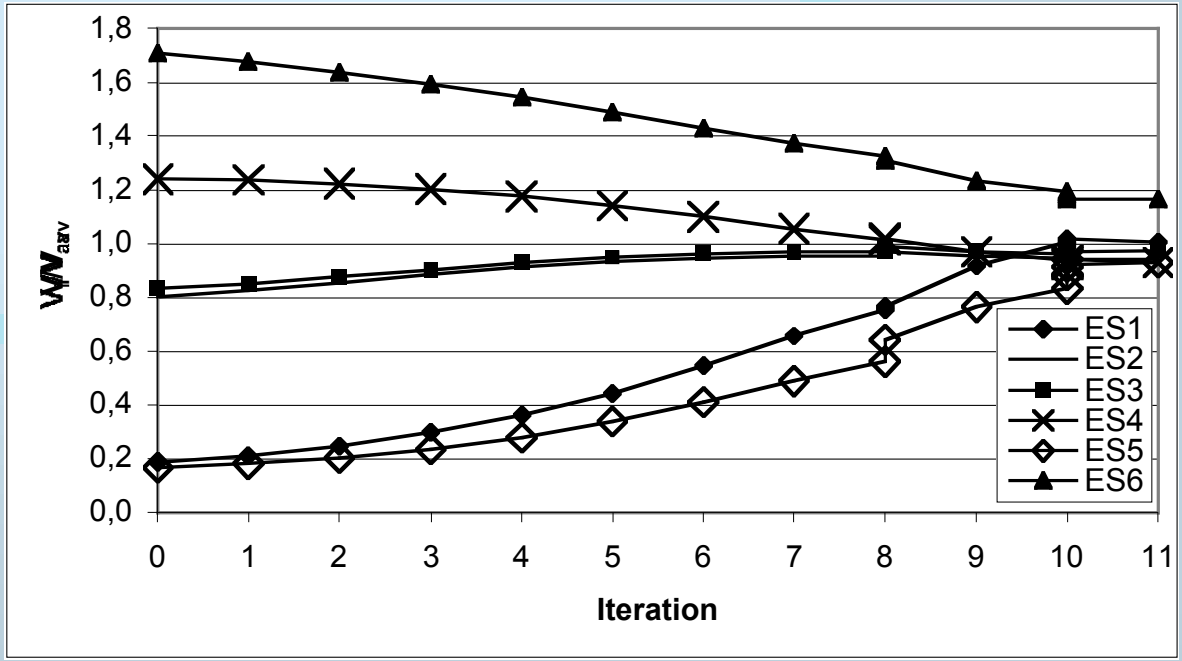

Final shape

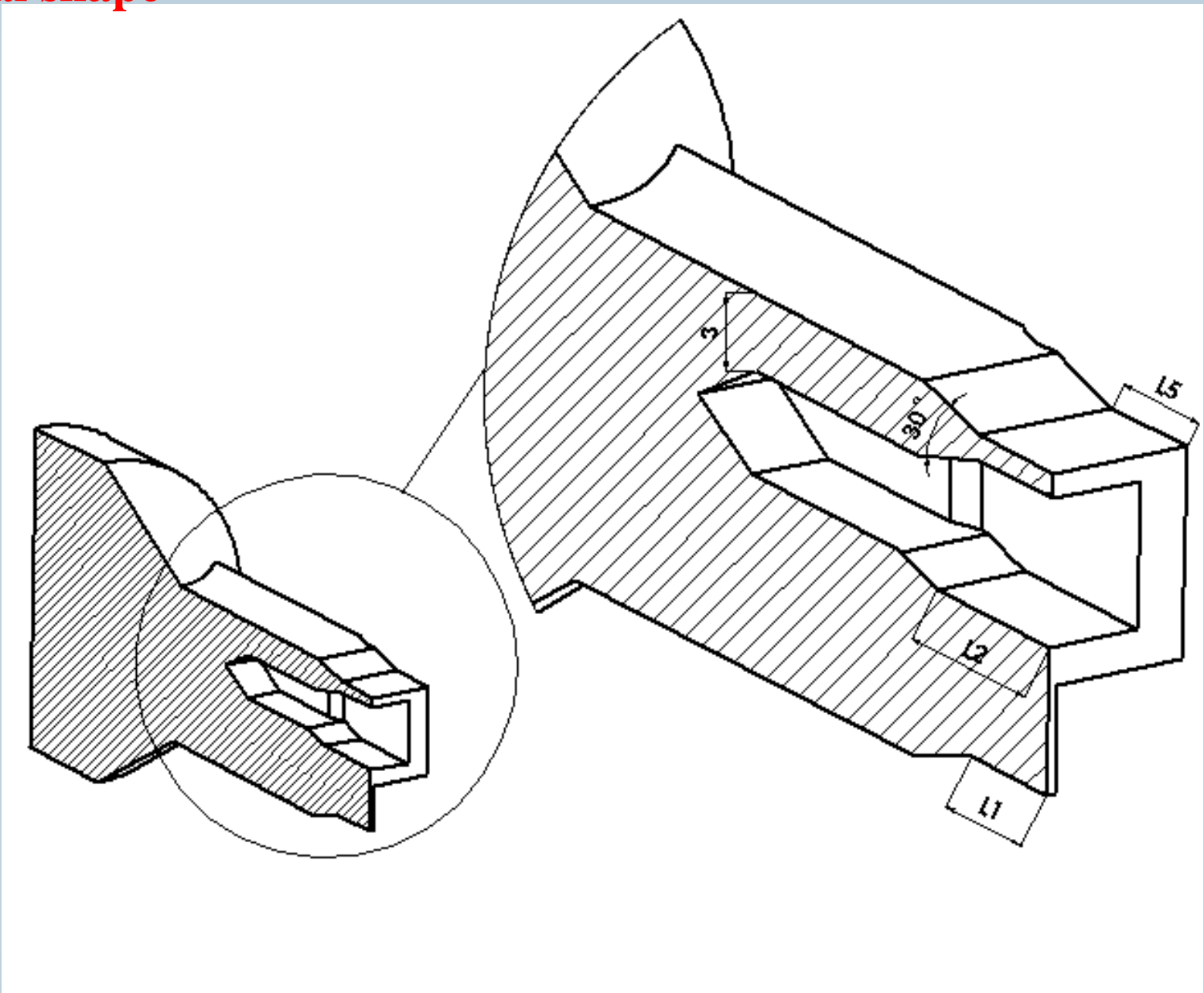

V) Recent results

- Highly accurate calculations in 4:1 contraction
  (> 1 million DOF ~ 200 000 cells; rfined meshes ~0.3% minimum cell size) - shown in 2nd PART

- CUBISTA- shown in 2nd PART;

- Viscoelastic time dependent calculation (UBI);

- Multi-mode calculations (not shown);

VI) Analytical viscoelastic solutions

- Fully-developed pipe and channel flow with the Simplified (ξ=0) PTT fluid (Oliveira and Pinho JFM 387 (1999) 271-280);
- Fully-developed annular flow (concentric) for the SPTT fluid (Pinho and Oliveira JNNFM 93 (2000) 325-337);
- Fully-developed pipe and channel flow with the FENE-P fluid (submitted);

- Heat transfer in pipe and channels with and without viscous dissipation for the SPTT fluid: thermal and hydrodynamic fully-dev (Oliveira and Pinho IJHMT 43 (2000) 2273-2287; Coelho et al IJHMT 45 (2002) 1413-1423;
- Thermal development of flow of SPTT fluid in pipes and channels with and without viscous dissipation (submitted)

STARTED BECAUSE OF BOUNDARY CONDITIONS

Pipe flow, pipe heating, Br= 0

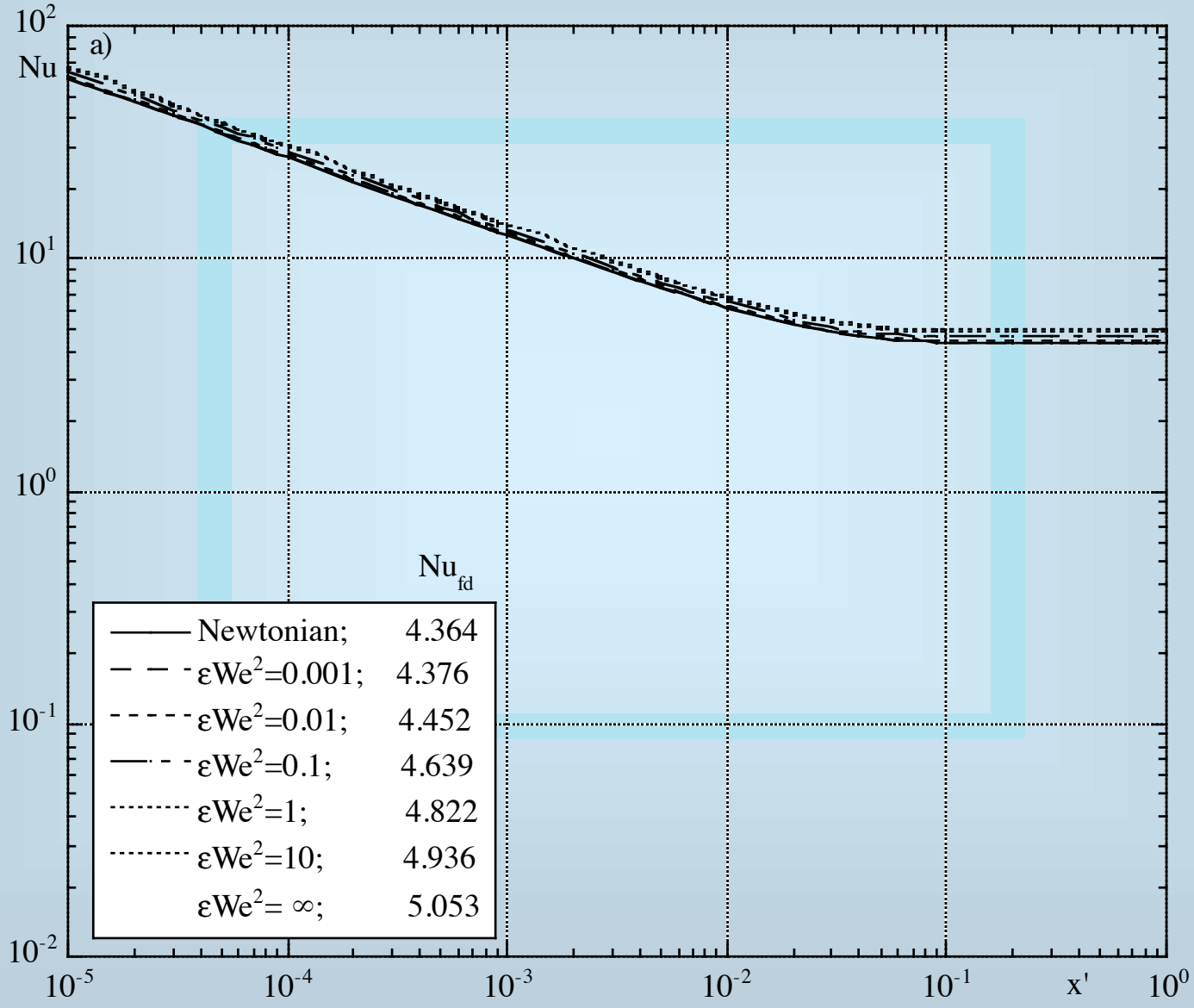

Pipe flow, pipe heating, Br= 1

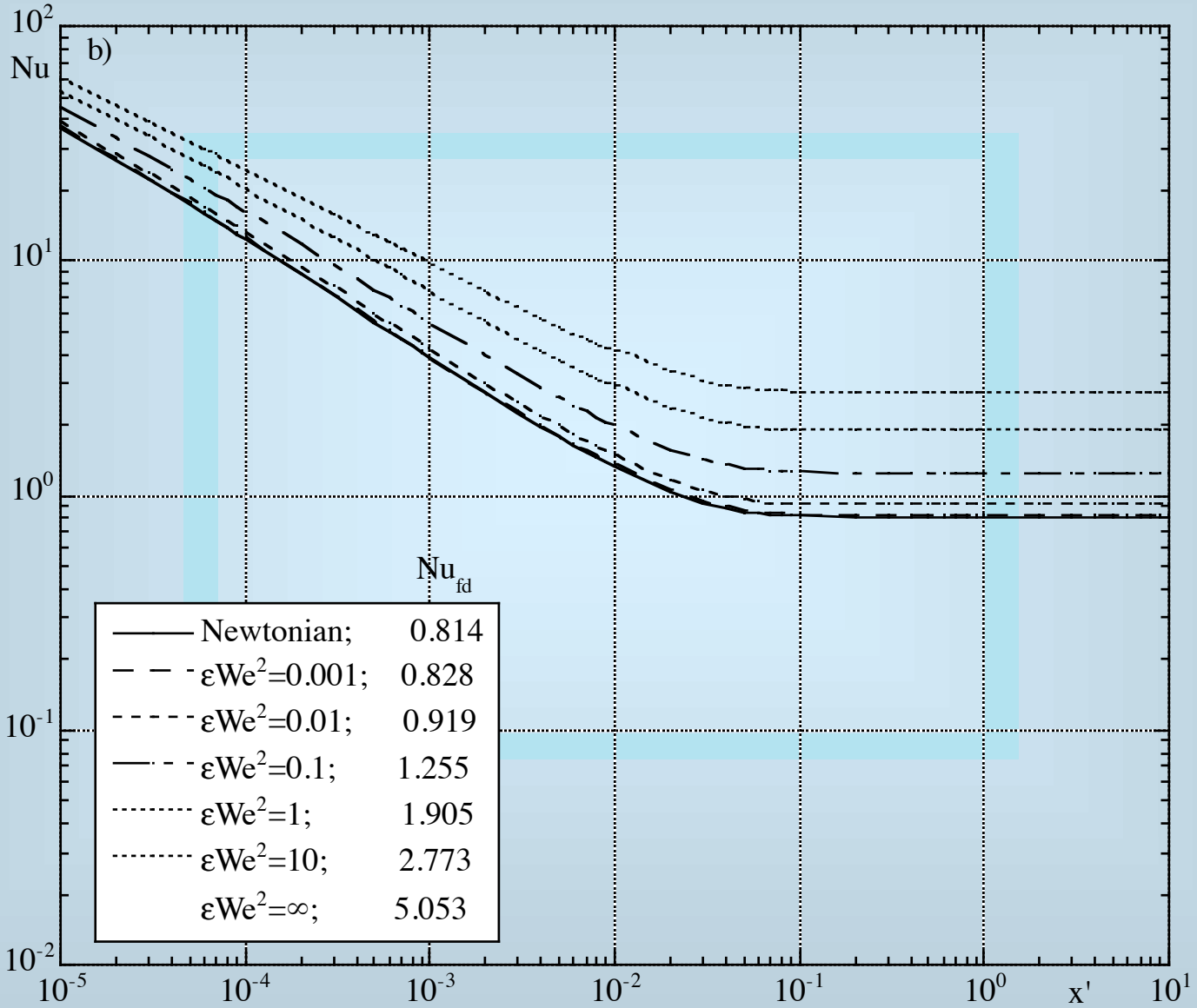

5) Turbulence modelling (with UFPa (later) and UBI (initial))

- Idea n° 1: GNF model with $\eta = f(\dot{\gamma}) \times g(\dot{\varepsilon})$

Mimics elasticity

- Idea n° 2: η affected by turbulence

$$\eta = f(\dot{\gamma}) \times g(\dot{\varepsilon}) \quad \rightarrow \quad \overline{\eta} = h(\dot{\gamma}, k, \varepsilon)$$

Turbulence kinetic energy

Rate of dissipation of turbulence kinetic energy

- New terms in balance equations because $\hat{\eta} = \overline{\eta} + \eta'$ and appearance of terms like

$\overline{u_i \eta'}$ $\overline{s_{ij} \eta'}$ & many others

- Comparison with pipe flow experiments

i) k-ε low Reynolds model of Nagano-Hishida

ii) Damping functions derived by analogy with Stokes problem (as in Van Driest)

iii) C determined with 0.125% PAA for f - Re fitting;

iv) Not very sensitive to C

ENCOURAGING RESULTS

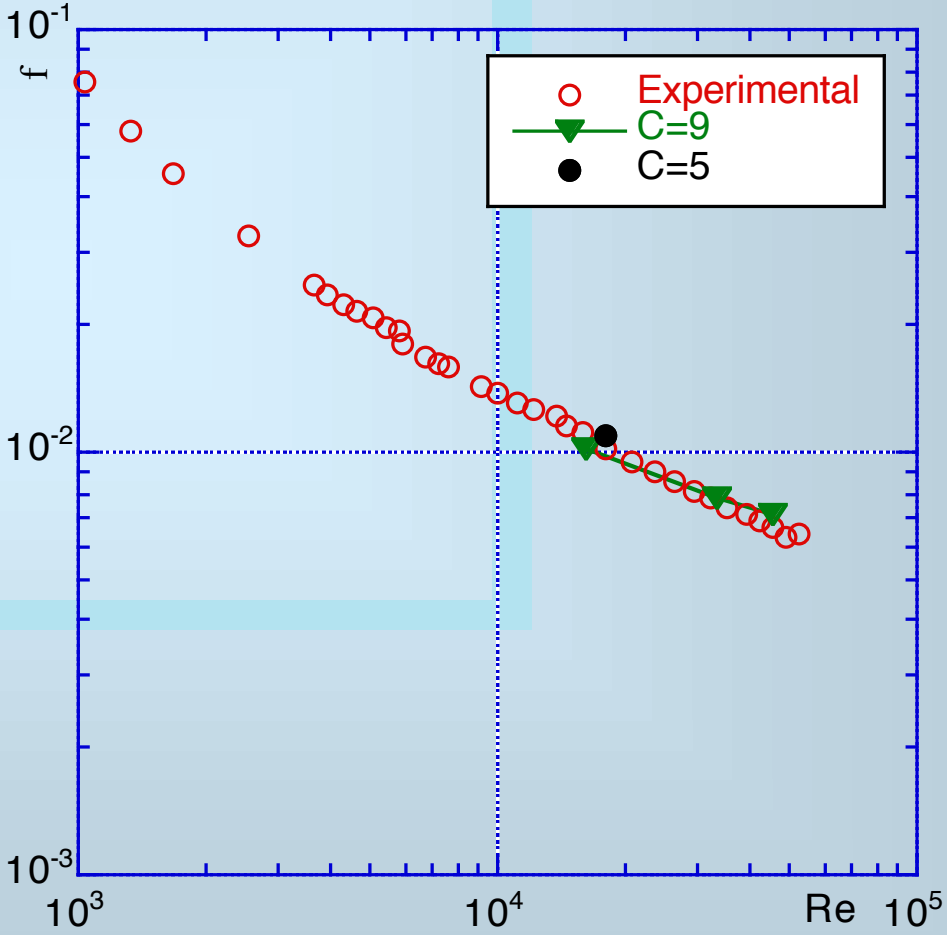

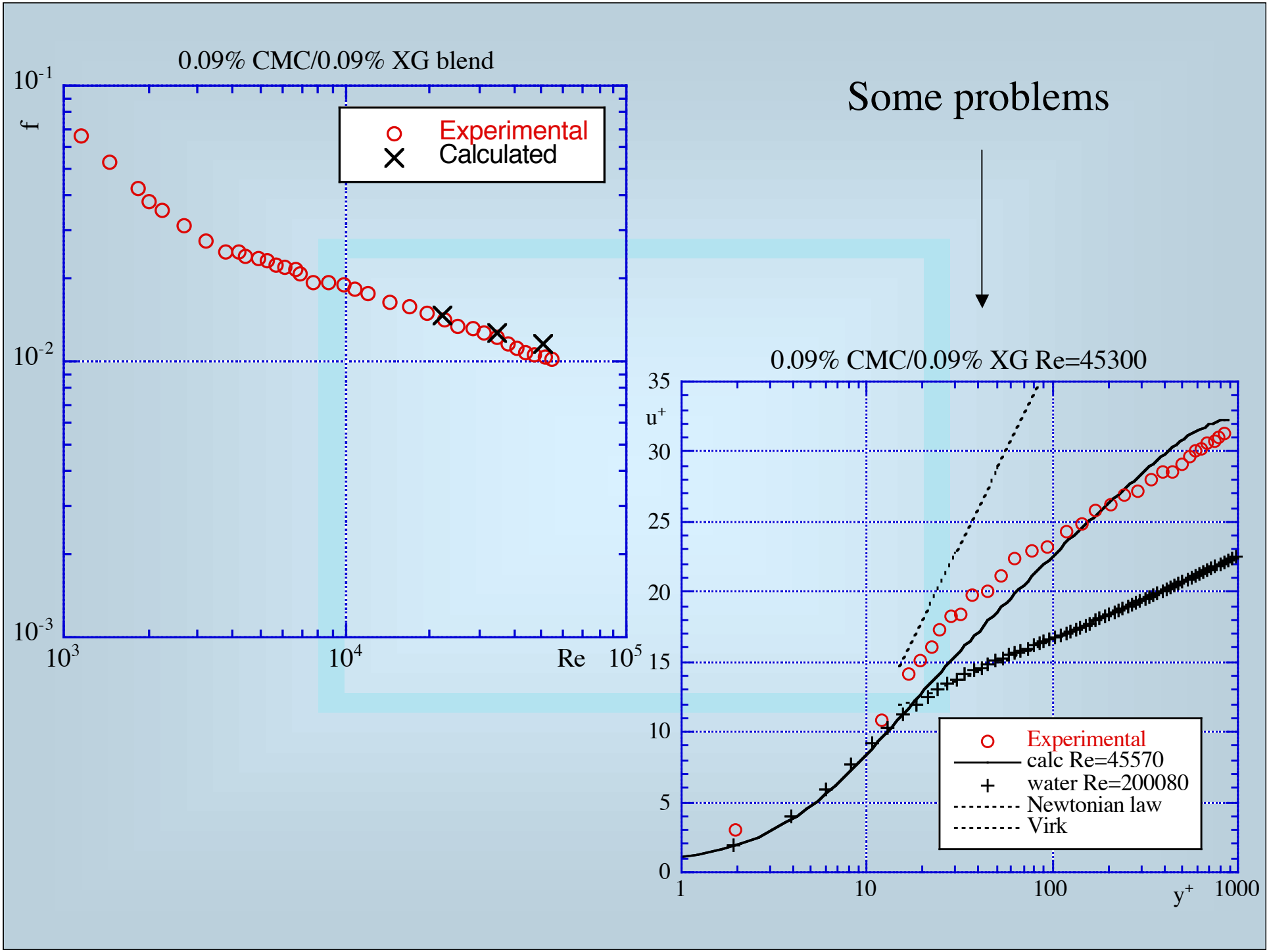
0.09% CMC/0.09% XG blend
f
Re
Experimental
Calculated
Some problems
0.09% CMC/0.09% XG Re=45300
u+
y+
Experimental
calc Re=45570
water Re=200080
Newtonian law
Virk

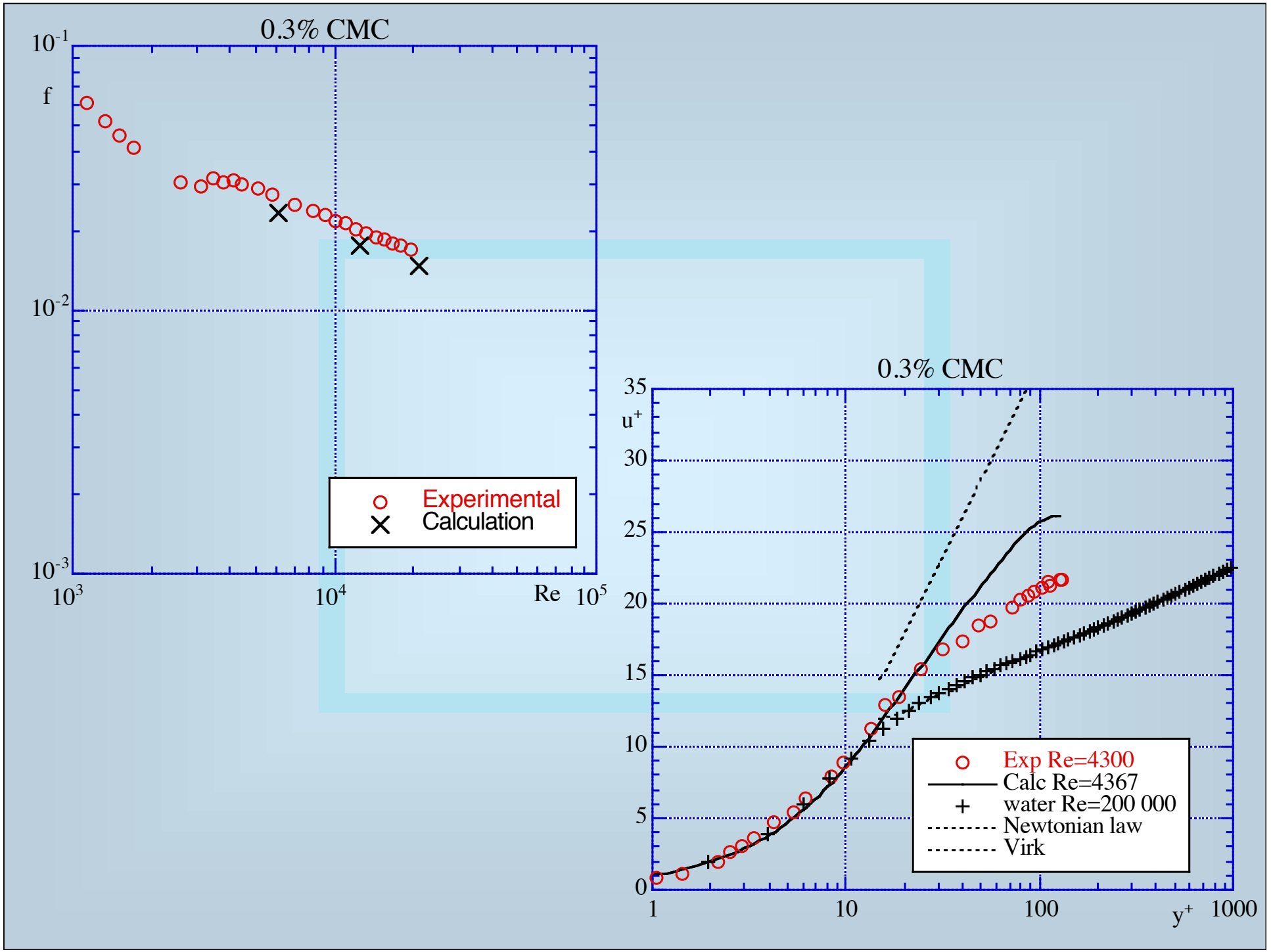
0.3% CMC
f
10^{-1}
10^{-2}
10^{-3}
10^{3}
10^{4}
10^{5}
Re
Experimental
Calculation
0.3% CMC
u^+
35
30
25
20
15
10
5
0
1
10
100
1000
y^+
Exp Re=4300
Calc Re=4367
water Re=200 000
Newtonian law
Virk

- Improvements in u+ versus y+;
- Need to compare *k*;

- Extend to Reynolds stress model for sudden expansion;

- Redevelop with improved constitutive equations

NEED FOR EXTENSIONAL VISCOSITY DATA