Proceedings of the 7th International Conference on Mechanics and Materials in Design
Albufeira/Portugal 11-15 June 2017. Editors J.F. Silva Gomes and S.A. Meguid.
Publ. INEGI/FEUP (2017)

PAPER REF: 6416

LIMIT EQUILIBRIUM ANALYSIS OF NAILING AND END ANCHOR PERFORMANCES IN THE SLOPE STABILITY

Rouhallah Yal Beyranvand(*), Iman Raeesi Zadeh
Institute of civil Engineering, Islamic Azad University, Khomein, Iran
(*)*Email:* r.y.beyranvand@gmail.com

ABSTRACT

There are different methods for stabilising soil slopes like using nailing and end anchors. The main focus of this paper is to study the effect of nailing and end anchors on the factor of safety for stability of slopes by using limit equilibrium analysis and to study effective parameters. Stability of various soil slopes was analysed using SLIDE V 6.0 software and was verified by comparing the results with previous analytical works. 192 numerical model were presented and results showed the effect of soil cohesion, internal friction, volume weight and soil support type on the factor of safety in static and seismic analysis using Limit equilibrium method.

Keywords: soil nail, end anchor, safety factor, SLIDE.

INTRODUCTION

A diverse range of methods have been proposed for analyzing the stability of nail-reinforced slopes, including the limit equilibrium method, the finite-element method, and the kinematics method. Based on the different hypotheses for slope failure surface and/or the soil-nail interaction model, soil nail behavior was analyzed and the design was optimized with respect to various parameters, including length, spacing, inclination, diameter and geometric arrangements.

The slope stability analyses are conventionally assessed using Limit Equilibrium Methods (LEM) (Cheng et al., 2007). The reinforcement effect and mechanism for soil nailing in slopes was investigated via observations of the strain-stress performance of nails, the safety level of soil nail wall, and the soil-nail interaction. The aseismic nail-reinforcement mechanism was demonstrated by comparing the deformation between reinforced and unreinforced slopes via centrifuge model tests under earthquake conditions and 1g shaking table tests (Tatsuoka et al., 2012).

The failure of nails was recognized as a combination of pull-out failure and bend deformation. The loading conditions were shown to have a significant effect on slope deformation and nail deflection (Zhang et al., 2014). To study the effect of soil support types on the factor of safety for stability of slopes, 192 numerical models were presented and the effect of soil cohesion, internal friction, volume weight on two type of supports i.e. soil nail and end anchor were investigated.

The safety factor of main model of slope has been achieved by (Kamari et al. in 2006) with analytical solution and results showed the value of 2 as an exact response. In this paper, the model was analysed by limit equilibrium method and safety factor (F.S.) of slope was obtained as 1.972 that has been showed in Fig. 1.

RESULTS AND CONCLUSIONS

As shown in Fig. 2, this study aimed to demonstrate the variation of safety factor of soil slope reinforced with two support type by soil parameters (volumetric weight g, cohesion C and internal friction f).

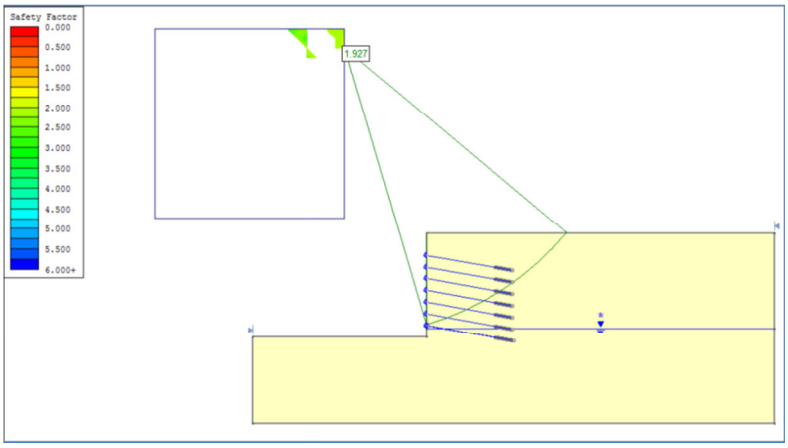

Fig. 1 - Safety factor of slope stabilized by grouted tieback with friction

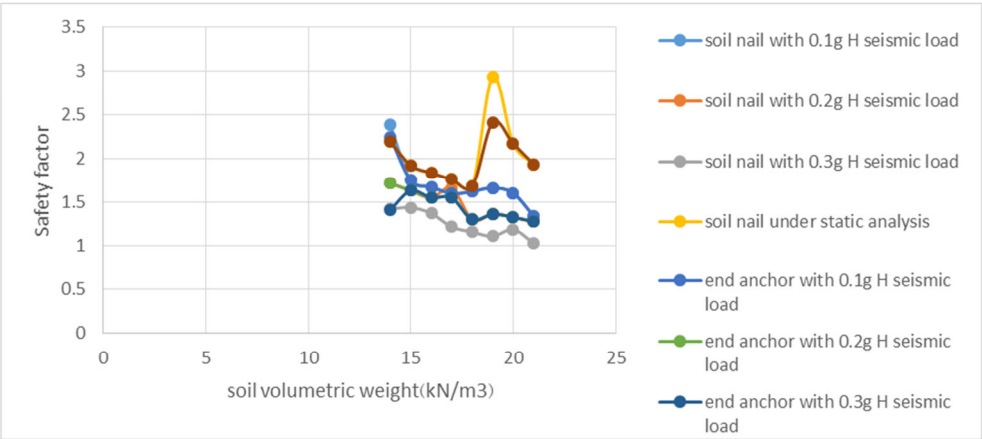

Fig. 2 - variation of F.S. by g in soil nail and end anchor

REFERENCES

[1]-Cheng, Y. M., Lansivaara, T., & Wei, W. B. (2007). Two-dimensional slope stability analysis by limit equilibrium and strength reduction methods. Computers and Geotechnics, 34(3), 137-150.

[2]-Hatef, N., Kamari, M., (2006). Stability analysis of soil slopes reinforced by soil nailing, Journal of The College of Engineering, 39 (3), 415-426.

[3]-Tatsuoka, F., Munoz, H., Kuroda, T., Nishikiori, H., Soma, R., Kiyota, T. & Watanabe, K. (2012). Stability of existing bridges improved by structural integration and nailing. Soils and Foundations, 52(3), 430-448.

[4]-Zhang, G., Cao, J., & Wang, L. (2014). Failure behavior and mechanism of slopes reinforced using soil nail wall under various loading conditions. Soils and Foundations, 54(6), 1175-1187.