Proceedings of the 7th International Conference on Mechanics and Materials in Design
Albufeira/Portugal 11-15 June 2017. Editors J.F. Silva Gomes and S.A. Meguid.
Publ. INEGI/FEUP (2017)

PAPER REF: 6495

THE APPLICATION OF MACHINE VISION SYSTEM TO MONITOR THE PROCESS OF PACKING IN A MANUFACTURING COMPANY

Remigiusz Labudzki(*), Rafal Talar, Filip Sarbinowski
Institute of Mechanical Engineering (ITM), Poznan University of Technology, Poland
(*)*Email:* remigiusz.labudzki@put.poznan.pl

ABSTRACT

The aim of this paper is to describe the ability to integrate with existing production line machine vision system supervising its work and demonstrate increased productivity which is the result of the application of the proposed solution. Sub-goals: limitation of routine activities performed by the operator, reduction of set-up times of the production line, automation process of calibrating the machine, automatically detect product defects at an early stage of manufacture, introduction of an automated system of counting and classification of products.

Keywords: machine vision, production engineering, mechanical design, maintance.

INTRODUCTION

The inspiration for the writing of "The application of the system of machine vision to supervise the packing process in selected manufacturing company" has become, unmet need for improving knowledge, particularly from the application of computer technology in the production, including the question of machine vision, while the use of skills in the field of construction machinery, equipment CNC and modeling in CAD systems to create a design multidisciplinary.

Characteristics of faults and their causes during the manufacturing process shows that the impossible or highly inefficient would attempt to intervene in the mechanical structure of the production line so as to preclude the possibility of the formation of these defects. It is therefore necessary to consider the possibility of automatic quality control on-line, allowing quicker detection of defects arising and the possible removal of its causes.

As it concerns the issue of visual defects of the product, you can reject the possibility of their identification in a mechanical way. In this paper will be presented improvement based on the vision system, whose task will be to examine the loaded image for correctness stated printing and specify the fault position of the shaft with “Bobin” and generate an appropriate control signal, allowing to compensate the error.

ANALYSIS OF IMPORTANT OPERATION OF THE PRODUCTION LINE

Research focuses on the simplest machine production line, used for packaging of bulk blends, located in the hall of the plant. In contrast to other, newer does not have the modular construction. It is characterized by a coherent structure which enables the supply of energy

required for each operation from a single drive via a complicated system of cams and gears. The exception here are labeling and weighing, which have their own drives.

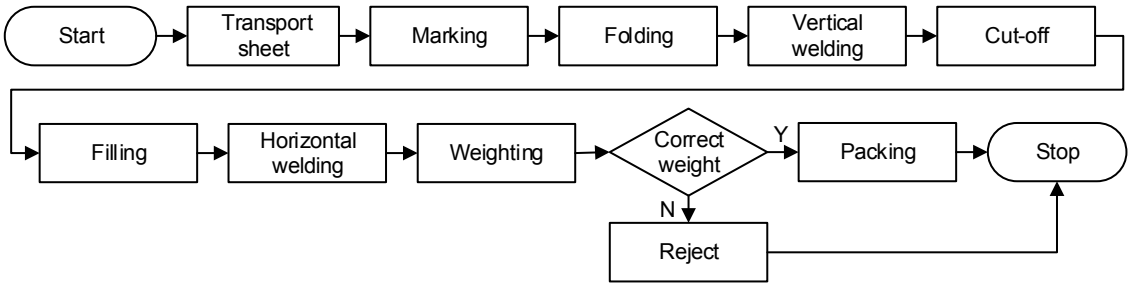

Fig. 1 - A block diagram of the operations performed on the production line

TRANSPORT OF THE SHEET

The material has an initial wrapping is supplied as coils forty kilograms sheet with a width of approx. 640 mm and a length of 920 m (so-called Bobbin). The final size and material of the bobbin, and hence of the package depends on the packaged product. Bobbin is assumed on the shaft where it is compressed from both sides of the special positioning means which are to prevent unwanted axial and angular shifts of the bobbin on the shaft. After that the shaft is coupled with the bearing shaft of smaller diameter, which is the foundation of the entire system and allows for angular movement of the shaft after deposition of the holders line. The sheet is drawn by a system of rollers to roll inhalers by which it is gripped. This ensures even distribution of the sheet, and also eliminates the possibility of corrugations or folds. A proper tension of the belt provides a shaft formed on the two booms, one of which is connected to the frame by a spring. When the sheet is drawn it is created a force that maintains the shaft and disappear only at the time of the processing operations, when the roller falls due to the force of the spring tensioned, thereby biasing the entire sheet. An important element is the brake that blocks the rotation shaft Bobin for the duration of technological operations. This is necessary due to the nature of the start-foot of transportation sheet- if you run out of the brake, the moment of inertia reel it would generate a continuous rotation, which would lead to a loosening of the sheet and as a result of the defects.

DEFECTS

Observation of the packaging process, allow the detection of the two most emerging defects in the product, which must qualify it as a non-compliant product. They are: printing the wrong date and serial number, or a total lack of printing and unequal submission package.

The error printing depending on its nature, can be either an error made by the operator, or wear or defect of dating. If printed is inadequate expiry date or batch number inconsistent with the real, it can be assumed that the cause of defects is incorrect setting of the stamp by the operator. Often appearing error is also a complete lack of printing or a part thereof, which is usually caused by wear the ribbon or the local dirt.

Incorrect laying of the package is the most common mistake during the material manufacturing process. Its cause is the inappropriate position of the reel with respect to the wedge at which the sheet is folded. The plane of symmetry of the wedge should pass through

the sheet exactly in the middle of. Displacement of the bobbin relative to the wedge moves to the bending line of the sheet relative to its center, and as a result of incorrect assembly.

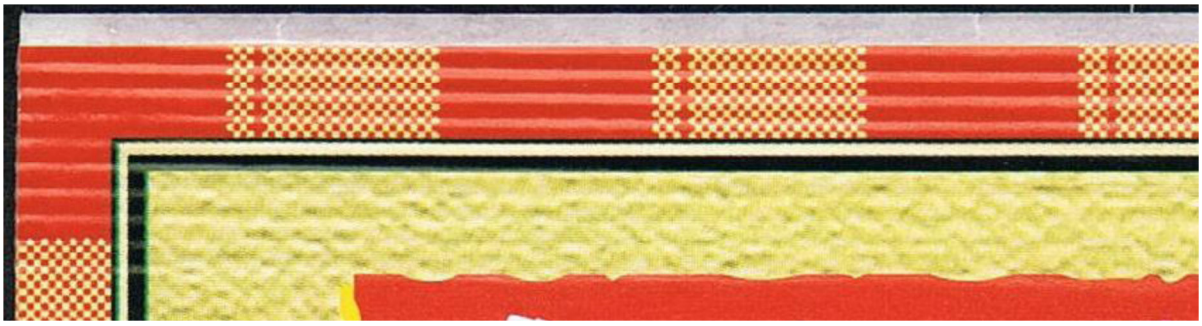

Fig. 2 - Incorrect assembly

A roll of material suitable location on the package is generated in each case in retooling the machine. It is impossible to assume the ideal desired position and even with the use of tapered positioning elements as a cardboard tube (core) on which is wound the sheet is very susceptible to and in contact with the positioning member always becomes deformed, the volume of which is a function of many factors, so that accurate its value is difficult to predict.

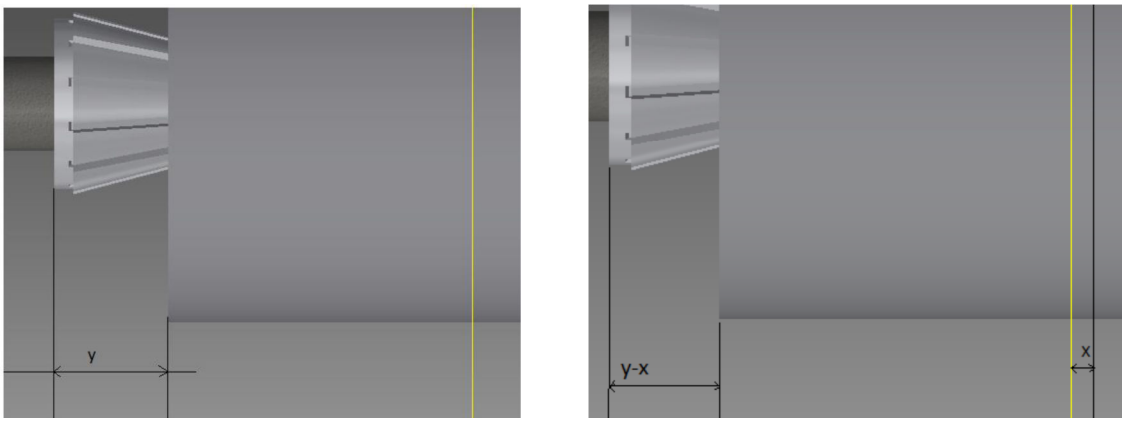

Fig. 3 - The influence of deformation of the bobbin core to the position error against the edge
a) no error - collinear planes of symmetry reel and wedge, b) error position - gap between
the plane of symmetry of the key (black axis) and the bobbin (yellow axis)

It should be noted that the deformation of the bobbin core is not the only cause of the error in question. It consists also confusion core diameter, the consumption of positioning elements and technological clearances, which are necessary for a smooth changeover of the production line.

The result of the impact of these factors is very low reproducibility of positioning shaft position of Bobin. You must, therefore, was to use a solution that would allow for compensation arising from errors. This functionality is achieved through the use of bolts coupled with the shaft of Bobin, which is part of positioning the shaft in the body of the sheet delivery system. By turning it to obtain the movement of the shaft along its axis.

This approach forces the compensation on-line, ie. During the operation. Once armed, the production line operator starts it, then visually evaluate the size of the fallacy of composition and on the basis of observations made shift shaft Bobin by turning the nut. There is no doubt that flawless estimate the angle by which turn the nut is virtually impossible, so the process is repeated several times, it will be obtained a satisfactory effect. In conjunction with very high inertia of the process (the sheets must be passed through the sheet feeding system, before you

can see the effect of the compensation), causes a significant waste of time and huge losses of the material, which translates into increased costs of production.

THE PROPOSAL TO IMPROVE

Construction

Characteristics of faults and their causes during the manufacturing process shows that the impossible or highly inefficient would attempt to intervene in the mechanical structure of the production line so as to preclude the possibility of the formation of these defects. It is therefore necessary to consider the possibility of automatic quality control on-line, allowing quicker detection of defects arising and the possible removal of its causes.

As it concerns the issue of visual defects of the product, you can reject the possibility of their identification in a mechanical way. In this paper will be presented improvement based on the vision system, whose task will be to examine the loaded image for correctness stated printing and specify the fault position of the shaft with Bobin and generate an appropriate control signal, allowing to compensate for the error.

In order to enable control the position of the shaft Bobin, was modified design of the sheet feeding. One of the objectives of structural design is to ensure manufacturability, which will produce all of its elements in the department repair company, which is to minimize the costs of a possible implementation of the modification.

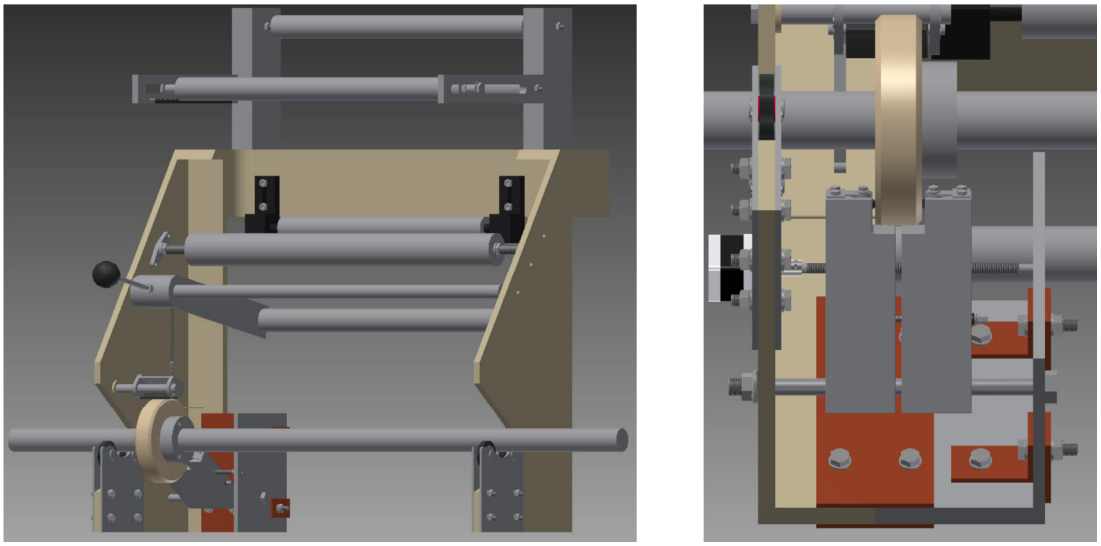

Fig. 4 - 3D model modernized the sheet feeding

The positioner will move on the guide rod means mounted on one side of the body of the sheet feeding system, and with the second steel plate to the structure introduced for the purposes of this project. The second support point of the positioner is to constitute the cooperating with the propeller, the coupled stepper motor, deposited on the outer side of the machine body. This design does not allow you to move relative to each other two parts of the body positioner. To provide this functionality, the lead screw engages a threaded coupling with only one portion of the body of the positioner. In a second embodiment of the non-threaded hole with a diameter of 0.5 mm larger than the diameter of the screw. This system is a screw drive, the energy for transmitting corresponding displacement of the shaft Bobin.

Vision system

The purpose of the vision system is to be supervising the production line in order to detect emerging errors. If an error is detected printed on the package, sent to be a signal telling you that the segment is invalid, but if the system detects an error submitting the sheet generated want to signal a stepper motor system positioning, containing information about the angular misalignment needs to perform engine to compensate for the resulting error. As additional functionality, implemented counting algorithm recognized barcodes, and on this basis, creating a database of information on the number of goods produced specific type.

As additional functionality also introduced an algorithm that calculates the number of steps you must perform a stepper motor to compensate for the fallacy of composition.

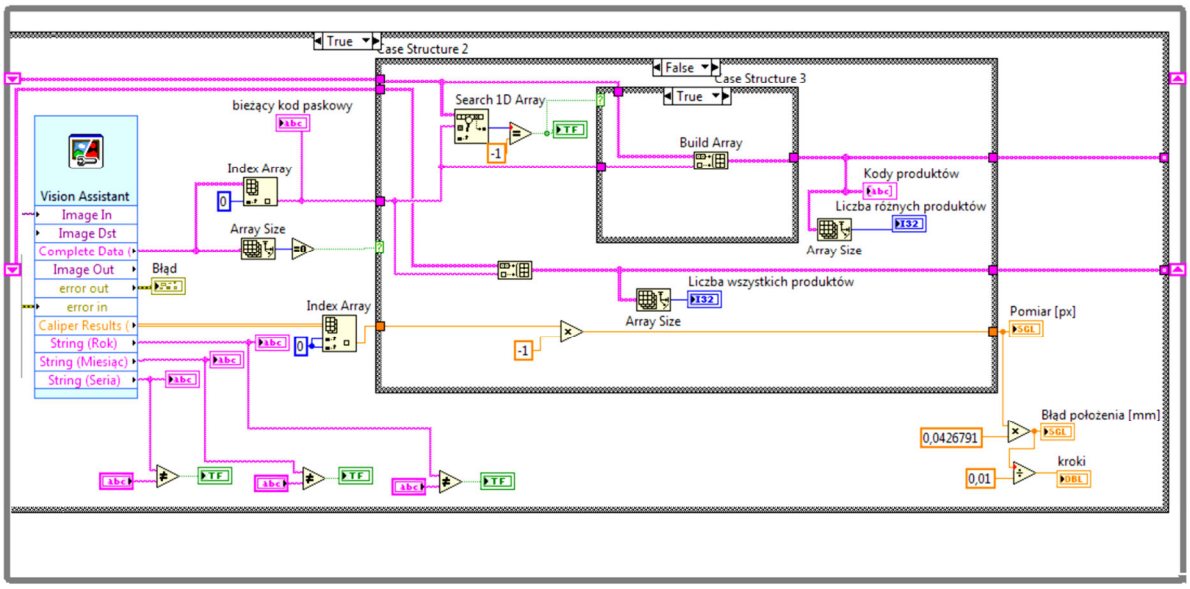

Fig. 5 - The algorithm processing of the measurement results (LABVIEW)

On the basis of a comparison measurement is performed by an image recognition algorithm and the measurement was carried out on a machine coordinate is calculated, the value of the measurement error is equal to 0.07 mm. Taking into account the error caused by clearances in gear and the confusion generated by the discreet nature of the positioning of the stepper motor is assumed that the positioning error of the proposed device is 0.1 mm.

With the modification introduced, it is possible to limit the number of correction cycles in retooling to Ck = 1 and shorter set-up times of the production line Tp = TPN = 7 min. Material losses caused by the rejection of the overprint reduced to N = 50 m / year.

The result of application of the automatic compensation system error submitting the test object technical ceased to demonstrate the dependence of the time of its changeover from a change width of the used reels. The result of this treatment is to reduce the bobbin exchange time by 62.5%. Significant change was the speed of response to the emergence of błędu-initiation regulation occurs with minimal delay (due to the time of data transfer) in relation to an error is detected, and also the same time the regulation is negligibly small. Effect on process time retooling the production line is also a change in the foundation of the shaft in the body. The proposed solution can reduce the count routine activities necessary to picture the empty spool and the foundation of a new sheet.

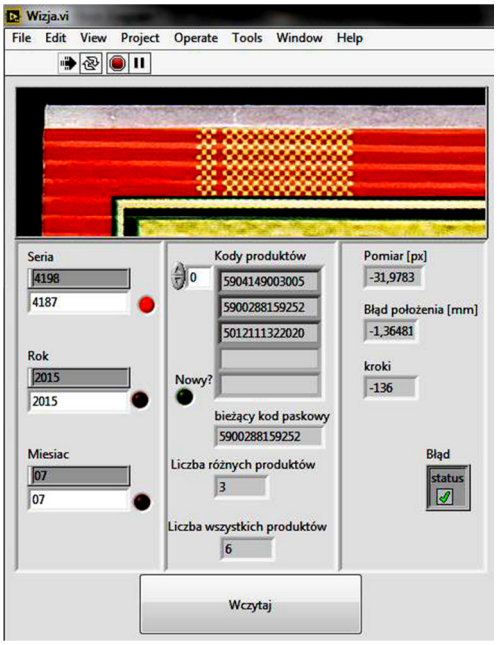

Fig. 6 - Info screen for results of machine vision system inspection

RESULTS AND CONCLUSIONS

In order to enable control the position of the shaft "Bobin", was modified design of the sheet feeding. One of the objectives of structural design is to ensure manufacturability, which will produce all of its elements in the department repair company, which is to minimize the costs of a possible implementation of the modification.

In order that the movement of the shaft from "Bobin" along its axis, the kinematic pair shaft - body should add one degree of freedom. To this end, the idea of the foundation in the form of additional components on the shaft and on both sides of the casing provided a pair of bearings on axles fixed to steel plates. The rear shaft to the bearing assembly, gives him the freedom to rotate around its axis and axial movement. On bearings, to reduce friction and prevent them from wear, cast iron alloy was deposited.

Based on the collected data and research results it is estimated that the implementation of the proposed modifications would reduce the time component of the auxiliary process responsible for the set-up time line of 26 minutes and 40 seconds to 7 minutes. This gain of time allows to produce extra 1 713 793 pieces of products.

ACKNOWLEDGMENTS

The authors gratefully acknowledge the Chicory Processing Plant Joint Stock Company (abbreviated name: CYKORIA SA) in Gniewkowo (Poland).

REFERENCES

[1]-Kurmaz L. Podstawy Konstrukcji Maszyn, 1999, PWN, Warszawa.

[2]-Davies E. Machine Vision, 2005, ISBN 978-0-08047-324-6.

[3]-Hornberg A. Handbook of Machine Vision, 2006, ISBN 978-3-52740-584-4.

[4]-Batchelor B. Machine Vision Handbook, 2012, ISBN 978-1-84996-168-4.