Proceedings of the 7th International Conference on Mechanics and Materials in Design
Albufeira/Portugal 11-15 June 2017. Editors J.F. Silva Gomes and S.A. Meguid.
Publ. INEGI/FEUP (2017)

PAPER REF: 6499

LOW-CYCLE FATIGUE LIFE OF AW 1050 ALUMINIUM ALLOY FSW AND TIG WELDED JOINTS

Sigitas Kilikevičius[1(*)], Ramūnas Česnavičius[1], Povilas Krasauskas[2]

[1]Department of Mechanical Engineering, Kaunas University of Technology, Kaunas, Lithuania
[2]Department of Production Engineering, Kaunas University of Technology, Kaunas, Lithuania
[(*)]*Email:* sigitas.kilikevicius@ktu.lt

ABSTRACT

This paper presents an investigation on low-cycle fatigue of aluminium alloy AW 1050 welded joints welded by two methods (friction stir welding (FSW) and Tungsten Inert Gas (TIG)). Low-cycle unidirectional (R=0) stress-controlled loading tests were carried out and low cycle fatigue life curves were obtained in order to compare these two welding methods in terms of durability under elastic-plastic cyclic loading.

Keywords: welded joints, FSW, TIG, low cycle fatigue.

INTRODUCTION

The process of welding is a reliable, low-cost and convenient method for joining mechanical components in case a permanent joint is required. Welded joints are often used in structures influenced by high loads which are not often repeatable, therefore, the elastic-plastic strain may occur in the weld. Under cyclic elastic-plastic loading, after the cycle number of hundreds - thousands, the fatigue crack appears which commonly causes failures. This phenomenon is known as fatigue failure. It is known that in welded joints failures usually happen in the heat affected zone (HAZ). Therefore, there is a need for other than conventional methods which would allow produce smaller HAZs. One of them is friction stir welding (FSW) considered as one of the most advanced for aluminium alloys and is used in various fields of industry: aviation, train and marine building, chemical industry etc. to weld aluminium materials which are difficult to weld by other processes (Smith, 2004).

The problem of low-cycle fatigue remains still relevant despite years of long-lasting investigations in this field. Czechowski investigated low-cycle fatigue of friction stir welded Al-Mg alloys and compared them with joints welded by the metal inert gas (MIG) method (Czechowski, 2005). It was found that the FSW welds have better mechanical properties and a higher fatigue life in comparison to the joints welded by the MIG method. Ceschini et al. studied the tensile and low-cycle fatigue behaviour of FSW joints (Ceschini, 2007). The influence of the FSW processing parameters on the low-cycle fatigue behaviour was studied by Cavaliere et al. (Cavaliere, 2008). Kilikevičius et al. investigated low-cycle fatigue properties of aluminium alloy welded joints (Kilikevičius, 2016).

This paper presents an investigation on the low-cycle fatigue life of AW 1050 aluminium alloy FSW and Tungsten Inert Gas (TIG) welded joints. The investigation is carried out under stress controlled unidirectional stress (R=0) cyclic loading in order to compare the influence of these welding methods on the durability of welded structures.

RESEARCH METHODOLOGY

Cyclical properties of FSW and TIG welded joints were investigated by conducting low-cycle unidirectional (R=0) stress controlled loading fatigue tests using an Instron ElectroPuls E10000 universal testing machine, which has a dynamic loading capacity up to 10 kN. A personal computer with standard Instron BlueHill 3 software for static characteristics and Instron LCF software for fatigue analysis was used.

Workpieces for specimens for the tests of the cyclical properties of FSW joints were produced welding two 110x50 mm plates of 1.5 mm thickness using a tungsten carbide square tip tool. The FSW was done at a feed rate of 100 mm/min and spindle speed rotation of 2000 rpm.

Workpieces for specimens for the investigation of TIG welded joints were prepared joining two identical square plates of the same dimensions with closed square butt welds from both sides by using an MAL 4043 filler wire under an amperage of 65 A.

The specimens were cut from the welded workpieces to the required dimensions using a laser cutting machine. The shape and dimensions of the used specimens are shown in Fig. 1.

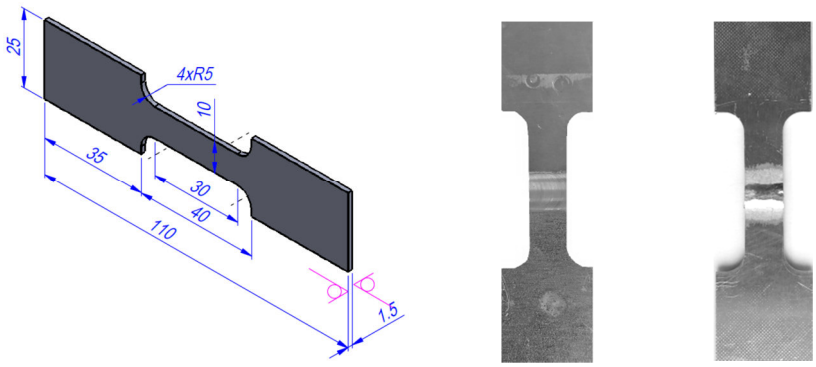

a b c

Fig. 1 - Shape and dimensions of used specimens (a); FSW welded (b); TIG welded (c)

Monotonic tensile tests were conducted on the specimens in order to determine the mechanical properties of the FSW and TIG welded joints. The obtained mechanical properties are presented in Table 1.

Table 1 - Mechanical properties of aluminium AW 1050 welded joints

Weld type	σ_{pr}	σ_u	e_{pr}
	MPa		%
FSW	55	92	0.198
TIG	25	74	0.202

The normalized stress and strain parameters were used in this study. Under stress controlled cyclic loading the variation of the normalized semicycle plastic strain hysteresis loop width ($\bar{\delta}_k$) with the increase in number of semicycles k, determines the cyclic stability of the material (in this case, the whole welded specimens). The normalized stress amplitude and the normalized semicycle hysteresis loop width are expressed as follows:

$$\bar{\sigma}_0 = \frac{\sigma_0}{\sigma_{pr}}; \ \bar{\delta}_k = \frac{\delta_k}{e_{pr}}, \tag{1}$$

where σ_0 is the loading stress amplitude, δ_k is the semicycle plastic strain hysteresis loop width, σ_{pr} and e_{pr} are the proportional stress and strain limits, respectively, $k = 2N$ and N is the number of cycles.

It was noticed that the variation of the semicycle plastic strain hysteresis loop width $\bar{\delta}_k$ is larger in even numbered semicycles and smaller in odd numbered semicycles $\left(\bar{\delta}_{even} > \bar{\delta}_{odd}\right)$, therefore the semicycle plastic strain hysteresis loop width $\bar{\delta}_k$ dependence on the number of loading semicycles k can be expressed as follows (Daunys, 2009):

$$\bar{\delta}_k = A_{1,2}\left(\bar{e}_0 - \frac{\bar{S}_T}{2}\right)k^{\alpha}, \tag{2}$$

where $\bar{e}_0$ is the normalized initial plastic strain, $\bar{S}_T$ is the cyclic proportional limit, A_1, A_2 and α are the cyclic characteristics of the material in even and odd semicycles, respectively.

The accumulated plastic strain after loading semicycles k, can be expressed as follows (Daunys, 2009):

$$\bar{e}_{pk} = \bar{e}_0 - \bar{\sigma}_0 + \sum_{1}^{k}(-1)^k \bar{\delta}_k . \tag{3}$$

The stress controlled low-cycle fatigue test can be approximated by the stress life curve (Bannantine, 1990):

$$\bar{\sigma}_i = \bar{S}_f^{'}\left(N_f\right)^b, \tag{4}$$

where $\bar{\sigma}_i$ is the normalized stress intensity amplitude, $\bar{S}_f^{'}$ is the fatigue strength coefficient which is approximately equal to the monotonic true fracture stress $S_f^{'}$, N_f is the number of cycles to failure, b is the fatigue strength exponent. A smaller value of b results in a longer fatigue life of the component.

RESULTS

The results of the low-cyclic loading tests showed that the hysteresis loop width of loading semi-cycles remains constant as the number of semi-cycles increases, this indicates that both the FSW and the TIG welded joints are cyclically stable.

It was observed that the FSW and TIG welded joints are accumulating plastic strain in tension direction. The dependences of the accumulated plastic strain on the number of cycles are presented in Fig. 2 and Fig. 3. It is seen that the TIG welded specimens are more prone to accumulate plastic strain.

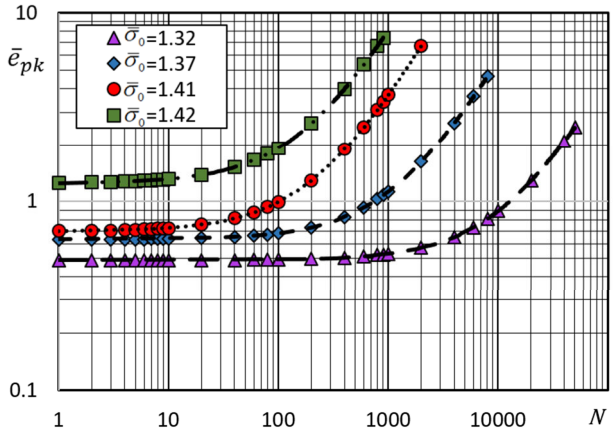

Fig. 2 - Accumulated plastic strain $\bar{e}_{pk}$ vs. loading cycles N for the FSW specimens

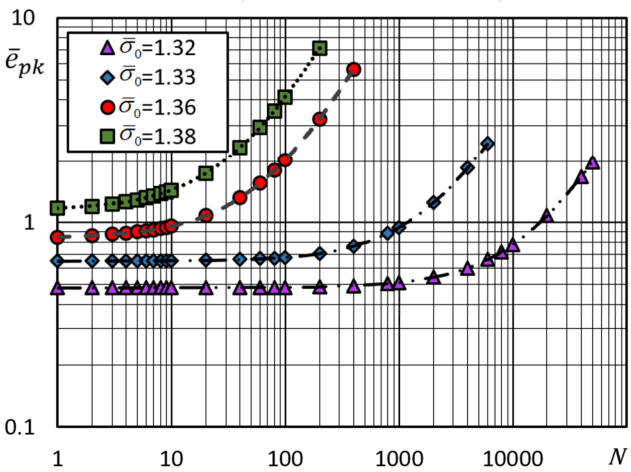

Fig. 3 - Accumulated plastic strain $\bar{e}_{pk}$ vs. loading cycles N for the TIG welded specimens

The obtained low-cycle fatigue curves in coordinates $\bar{\sigma}_0$ - N are shown in Fig. 4.

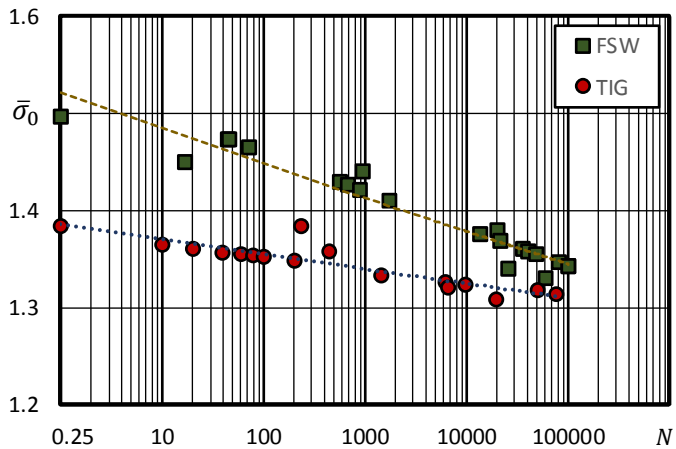

Fig. 4 - $\bar{\sigma}_0$ - N curves of the AW 1050 FSW and TIG welded specimens

The obtained low-cycle fatigue curves show that the FSW joints have a higher weld strength in compare to the TIG welded joints under low-cycle unidirectional (R=0) stress controlled loading. The obtained fatigue properties of the specimens are presented in Table 2.

Table 2 - Coefficients of the stress life curve (Eq. 4)

Weld type	$\overline{S}'_f$	b
FSW	1.52	0.011
TIG	1.39	0.005

From the data above, it can be stated that the FSW specimens have a better fatigue life as they have a lower b value.

CONCLUSIONS

Stress controlled unidirectional stress (R=0) loading experiments were performed on aluminium AW 1050 alloy FSW and TIG welded joints in order to compare the influence of the welding method on the durability of welded structures.

The results of the low-cyclic loading tests showed that the hysteresis loop width of loading semi-cycles remains constant as the number of semi-cycles increases, this indicates that both the FSW and the TIG welded joints are cyclically stable. It was observed that the FSW and TIG welded joints are accumulating plastic strain in tension direction. The TIG welded specimens are more prone to accumulate plastic strain.

It was found that the FSW joints have a higher weld strength and a better fatigue life in compare to the TIG welded joints under low-cycle unidirectional (R=0) stress controlled loading.

REFERENCES

[1]-Bannantine J. Fundamentals of metal fatigue analysis. Prentice Hall, 1990, -273 p.

[2]-Cavaliere P, Squillace A, Panella F. Effect of welding parameters on mechanical and microstructural properties of AA6082 joints produced by friction stir welding, Journal of Materials Processing Technology, 2008, 200(1), p. 364-372.

[3]-Ceschini L, Boromei I, Minak G, Morri A, Tarterini F. Microstructure, tensile and fatigue properties of AA6061/20vol.%Al_2O_{3p} friction stir welded joints. Composites Part A: Applied Science and Manufacturing, 2007, 38(4), p. 1200-1210.

[4]-Ceschini L, Boromei I, Minak G, Morri A, Tarterini F. Effect of friction stir welding on microstructure, tensile and fatigue properties of the AA7005/10vol.%Al_2O_{3p} composite. Composites Science and Technology, 2007, 67(3), p. 605-615.

[5]-Czechowski M. Low-cycle fatigue of friction stir welded Al-Mg alloys. Journal of Materials Processing Technology, 2005, 164, p. 1001-1006.

[6]-Daunys M, Česnavičius R. Low-cycle stress strain curves and fatigue under tension-compression and torsion, Mechanika, 2009, 6(80), p. 5-11.

[7]-Kilikevičius S, Česnavičius R, Krasauskas P, Dundulis R, Madhusudanan NS. Investigation on low cycle fatigue of aluminium alloy welded joints. Mechanics, 2016, 22(5), p. 354-358.

[8]-Smith CB, Hinrichs JF, Ruehl PC. Friction Stir and Friction Stir Spot Welding-Lean, Mean and Green. In Detroit American Welding Society Sheet Metal Conference, 2004.