Proceedings of the 7th International Conference on Mechanics and Materials in Design,
Albufeira/Portugal 11-15 June 2017. Editors J.F. Silva Gomes and S.A. Meguid.
Publ. INEGI/FEUP (2017)

PAPER REF: 6628

A NEW JOINT OF FRP DESIGN FOR A BUS STRUCTURE

Alejandro Quesada[1], María Jesús L. Boada[1(*)], Agustin Chiminelli[2], Rubén Breto[2], Miguel A. Martínez[3], Pedro Gálvez[3], Daniel Garcia-Pozuelo[1], Ester Olmeda[1], Vicente Díaz[1]

[1]Deaprtment of Mechanical Engineering Department, University Carlos III de Madrid, Madrid, Spain
[2]Materials and Components Division, Aragon Institute of Technology, Zaragoza, Spain
[3]Department of Materials Science and Engineering and Chemical Engineering, University of Carlos III de Madrid, Madrid, Spain
[(*)]*Email:* mjboada@ing.uc3m.es

ABSTRACT

In this work a new design is proposed to substitute a conventional node in a bus structure. The alternative node is made of carbon-epoxy FRP and is fixed to the steel structure of the bus by means of a structural adhesive. Design of the FRP core has been conducted, polyurethane based adhesive has been selected, and a FEM model has been built to simulate and compare the behavior of both (steel original and FRP proposed) designs. Extensometric tests have been conducted to validate the models and evaluate the most interesting design zone.

Keywords: FRP, coach superstructure, adhesive, FEM.

INTRODUCTION

The selection of a material for bus structures is a complicated optimization problem between mechanical properties required in the operation of vehicle and manufacturing as well as their production costs [1]. Steel tubing has been shown to be capable energy absorbers because of their progressive buckling under compressive loading and their structural lightness. Energy absorption is a crucial factor for analyzing crashworthiness because of the importance of protecting the occupants during crashes. Nevertheless, bus structures are subjected to dynamic loads, which are transmitted from the pavement to the structure causing fatigue in the welded joints of the components of the steel superstructure of buses and coaches. The fatigue cracks usually initiate at the toes of fillet welds of T type connections made with rectangular thin walled tubes [2]. Welded joints also present premature fails due to corrosion, needing more frequent inspections.

For these reasons, new concept designs, materials and assembly methods have to be developed and applied by bus and coach manufacturers. The LITEBUS project [3] has developed an all sandwich composite material to replace both steel and aluminium frames for buses. It not only reduces weight but also renders PSVs tougher and less prone to structural damage in accidents. Nowadays composites finds their usages mostly in aerospace and marine applications as they offered light weight, mechanical strength, corrosion resistivity, ease of maintenance.

While fiber-reinforced composites have showed potential for automobile parts in the past several decades, the application has yet to be realized on a mass production scale due to several drawbacks including low production, automation rates, and significant costs [4], [5].

Bus manufacturers have recently turned their attention to multimaterial design strategies. Structures built in that manner consist not only of regular steel parts, but contain also a mix of

components made from various lightweight materials like aluminium alloys or composites, which allow for significant reduction in vehicle curb weight. However, due to the differences in mechanical characteristics that are especially evident in the case of laminates, the material substitution is not a straightforward task [6].

Adhesive joints present important advantages against other types of joints for dissimilar materials, because it is a simple and flexible technology, which leads to a continuous joint without stress concentration and does not require great inversions.

As a solution of the fatigue crack, a new concept of joint made with FRP (Fiber Reinforced Polymer) is introduced in the steel bus structure in the most stressed joint. This joint is connected to the steel structure by means of an elastic-plastic adhesive bond.

In this work, the viability of the new concept for adhesive structural joints of dissimilar materials for busses and coaches.

THE COACH FEM MODEL

The coach model has been built from the 3D geometry given by the manufacturer in STEP format. A shell model has been selected, generating the mid-plane geometry model meshed with four nodes shell elements of 20 mm (Fig. 1).

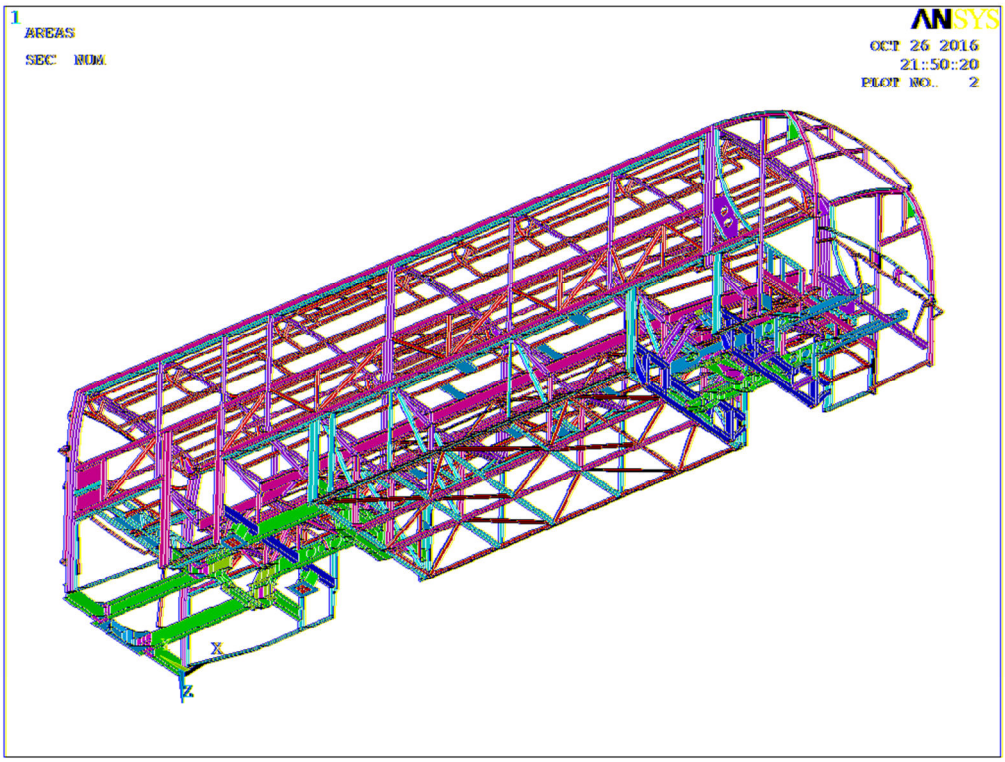

Fig. 1 - Shell model

Displacements have been restricted adequately in the suspension connection points.

The model has the following main characteristics:

- Number of nodes: 474.000
- Number of degrees of freedom per node: 6 (ux, uy, uz, rotx, roty, rotz).

The used material is Steel, with the properties shown in Table 1:

Table 1 - Steel properties

Young Modulus (Pa)	**2.1e+11**
Poisson`s ratio	**.29**
Density (Kg/m^3)	**7850**

A linear elastic isotropic model has been considered for the steel behaviour, which is an appropriate hypothesis since the loads do not take the material out of the linear elastic working range.

Solving the model for conventional load states that simulate conventional situations for a coach (braking, accelerating, curve passing…) reasonable results have been found, with correct deformed shape and stress values always under 150 MPa (Fig. 2).

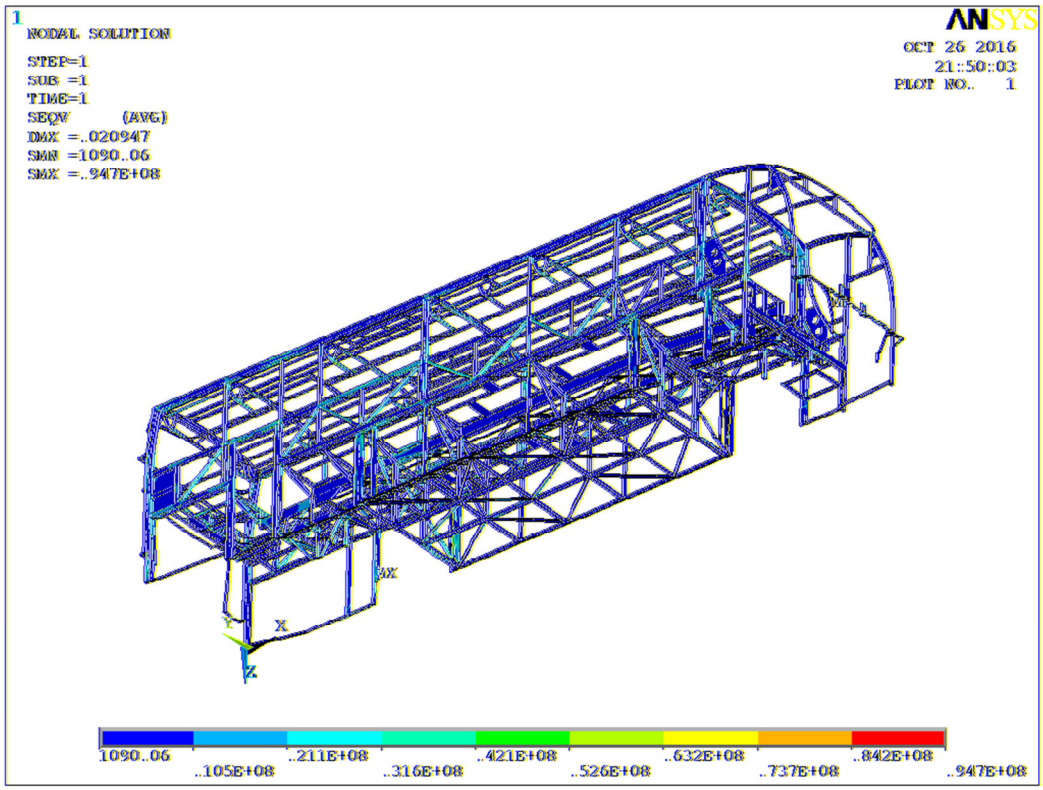

Fig. 2 - Stress distribution example

EXTENSOMETRIC TESTS

Static tests were carried out on the coach structure in order to select the nodes having larger stress values for the present study.

Used equipment:

- Weighing machine for heavy vehicles
- Hydraulic jacks to bring up the wheels
- Vishay SYSTEM 7000 extensometric scanner

18 static tests have been carried out measuring strain in some structure areas. 61 uniaxial and biaxial extensometric gauges were previously installed. Most of them have been placed near union nodes which have been identified in previous research as those more loaded, like unions between posts and lateral lattice near the windows or the wheels.

Torsion has been induced to the structure by bringing up one wheel with the jacks. Jacks are adjusted until the suspension connection point elevates 5 cm.

The conclusion of this procedure is that the most interesting union node for the present study is the one identified in Fig. 3.

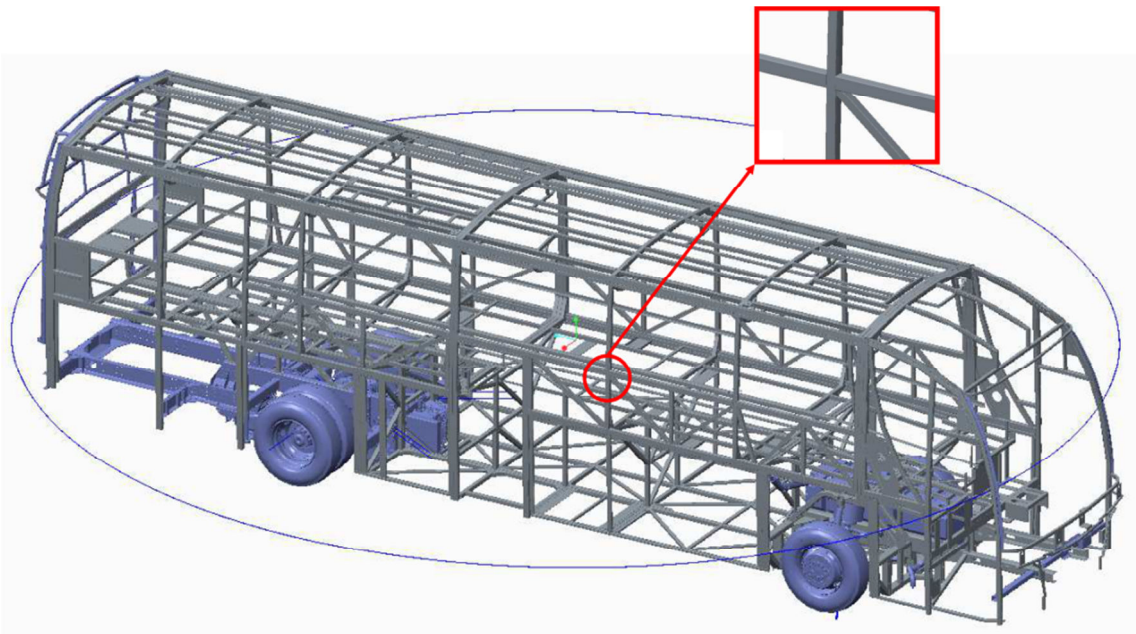

Fig. 3 - Coach structure selected node for study

In Fig. 4 the real node can be seen with the used instrumentation.

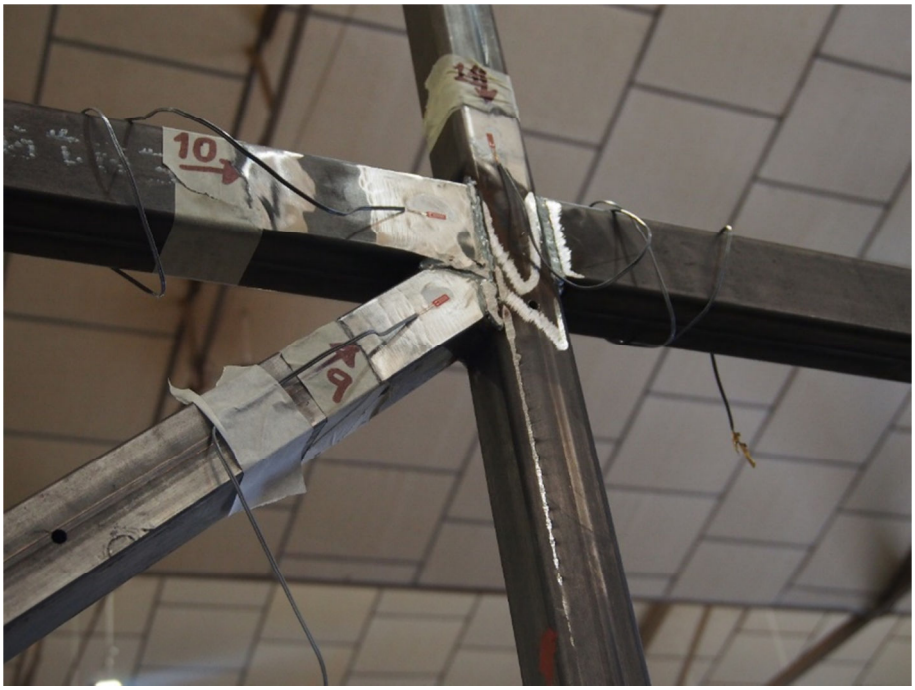

Fig. 4 - Part of the coach structure with extensometric gauges

ADHESIVE SELECTION

The selected adhesive must be sufficiently elastic-plastic, so that the fatigue stress in the structure of the coach is attenuated.

In recent years, the development of structural adhesives has been increased, mainly due to the great benefits that these types of materials provide to the joints. Among these benefits are: better distribution of loads (avoiding points of stress concentration), ability to join dissimilar materials (such as metals with composite materials) and less corrosion problems (avoiding the formation of galvanic corrosion batteries).

SikaTack Drive is selected, a polyurethane based adhesive. It is a very elastic-plastic structural adhesive. Currently, this adhesive is used for bonding the glasses of cars. As it is a structural adhesive, it has enough capacity to support the stresses to which the node will be subjected, providing the structure with the required elasticity to absorb the fatigue. On the other hand, as it is a polyurethane based adhesive, it has adequate behavior against external agents, such as humidity and temperature, so it is suitable for the raised problem.

It is necessary to ensure a cohesive breaking (through the adhesive) of the joint when working with adhesives, being adhesive breaking (in the substrate-adhesive interfaces) undesirable. Therefore, the right surface treatments on the bonded substrates must be developed. For this work and selected adhesive, different tests have been carried out, in order to find the best possible surface treatment for the raised joint. The selected surface treatments are shown below:

-CFRP: APPT + Sika Primer 215.

-Steel: Sika Primer 204N.

APPT is an Atmospheric Pressure Plasma Treatment. An ionized gas is applied on the surface of the material through a torch. This treatment can be used for both, polymers and metals, introducing polar groups on the surface of the material, increasing the surface energy value,

and making a better bond with the adhesive or with the primer possible. The treatment has been used to activate the surface of the polymer (CFRP), with 3 meters per minute of torch speed and 6 mm of torch-specimen distance.

Primers are products that favor the bond, forming chemical bonds between the substrate-adhesive interfaces. Primers also allow the protection of the joint against corrosion. Primer treatments have been used for both substrates, Sika Primer 204N for steel and APPT + Sika Primer 215 for CFRP.

FRP NODE MODEL

A node sub-model has been integrated in the complete coach model previously shown. The node consist on a five arms carbon-epoxy FRP core inserted in the steel structure and joined to the steel pieces by the selected adhesive, as shown in Fig. 5.

For this first approximation calculation a linear orthotropic model has been implemented for the FRM material and an isotropic one for the adhesive.

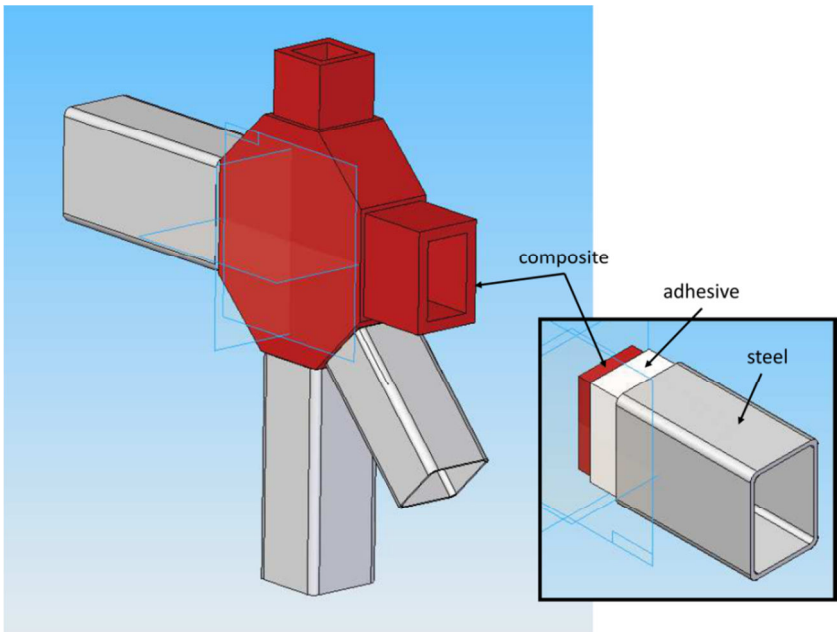

Fig. 5 - Proposed new design FRP node

RESULTS

In order to see if the new design is capable to redistribute the stress field, stress will be calculated in the steel bars near to the FRP node from the FEM model in the points under extensometric gauges 10 and 11 (Fig. 4).

In accordance with the extensometric tests, the connection point between the suspension and the coach frame has been elevated 5 cm.

In the complete steel model (original one, according to the manufacturer's design) normal stress in Z direction (vertical) under gauge 11 is 3.76 MPa. After FRP node with polyurethane joint is implanted σ_z decrease to 1.94 MPa.

In the same way, normal stress in X (longitudinal) direction under gauge 10 in the complete steel model is -6.87 MPa, but after FRP redesign σ_x decreases to -1.81 MPa.

Looking for stress variations in other nodes near to the modified one it can be seen that stress grows smoothly in some of them.

It is noticed that stress values are very small in all considered cases. The extensometric tests gave similar results for all the measurement points. It has to be considered that the frame structure is designed for passing more restrictive regulations, like overturning tests, and the structure do not reach high stress values in conventional torsion. But both models are completely linear and results can be extrapolated to higher values.

CONCLUSION

A shell finite elements model of a STELLAE OC500 RF coach has been built and used to simulate the behavior of a real node of the coach superstructure and an alternative design of the node with FRP and polyurethane adhesive joint.

The proposed design is capable to put up with the conventional loads that the coach frame is going to suffer in normal conditions and do not change the frame behavior in global terms.

Extensometric tests have been carried out over a real specimen of the coach structure in order to validate the FEM model, locate the most appropriate node and measure strains near the zone of interest.

SikaTack Drive polyurethane based structural adhesive is selected because it's good enough resistance, elastic-plastic behaviour and adequate performance against external agents. In addition, polyurethane based adhesives are frequently used for bonding the glasses of cars.

A study has been carried out to find the proper surface treatments to ensure cohesive breaking of the joint.

A sub-model of FRP and SikaTack node has been developed and introduced in the complete steel frame model in order to simulate the behaviour of the FRP joint in the superstructure.

The proposed design with carbon-epoxy and structural adhesive node significantly reduces the stiffness of the node, resulting in lower stress values for the node surroundings, allowing the designer to redistribute the stress field far from delicate design zones.

ACKNOWLEDGMENTS

The authors gratefully acknowledge the funding by Ministerio de Economía y Competitividad, Spain, under grants TRA2014-56471-C4-1-R, TRA2014-56471-C4-2-R and TRA2014-56471-C4-4-R.

The authors gratefully acknowledge the colaboration of Castrosua S. A. who provided with the CAD information and let making tests over a manufacturing specimen and Sika S.A.U. España for supplying the adhesives.

REFERENCES

[1]-Kyröläinen, A., Vilpas, M. & Hänninen, H. Use of stainless steels in bus coach structures. Journal of Materials Engineering and Performance, vol. 9 (6), pp 669-677. 2000

[2]-Branco, C.M., Ferreira, JA. Fatigue analysis of bus structures. Life Assessment of Dynamically Loaded Materials and Structures. Proceedings of the 5th European Conference on Fracture, pp 643-658.1984

[3]-LITEBUS. Modular Lightweight Sandwich Bus Concept. Avalaible on: http://ec.europa.eu/research/transport/projects/items/_litebus____the_bus_that_bounced_en.htm. 2016

[4]-Young S. Song, Jae R. Youn, Timothy G. Gutowski. Life cycle energy analysis of fiber-reinforced composites. Composites: Part A, vol. 40, pp 1257-1265. 2009

[5]-Comparison of carbon fiber vs steel manufacturing costs. Avalaible on: http://www.rmi.org/RFGraph-carbonfiber_vs_steel_manufacturing. 2016

[6]-Jakub Korta, Tadeusz Uhl. Multi-material design optimization of a bus body structure. Journal of KONES Powertrain and Transport, vol. 20 (1). 2013

.