Proceedings of the 7th International Conference on Mechanics and Materials in Design
Albufeira/Portugal 11-15 June 2017. Editors J.F. Silva Gomes and S.A. Meguid.
Publ. INEGI/FEUP (2017)

PAPER REF: 6642

AEROELASTIC ANALYSIS OF COMBINED CONICAL - CYLINDRICAL SHELLS

A.A. Lakis[1(*)], Y. Kerboua[2], M. Toorani[3]

[1]Mechanical Engineering Department, Ecole Polytechnique of Montreal, Montreal (QC), Canada
[2]Mechanical Engineering Department, Constantine University, Constantine, Algeria
[3]School of Engineering and Information Technology, Conestoga College, Cambridge (ON), Canada
[(*)]*Email:* aouni.lakis@polymtl.ca

ABSTRACT

This paper addresses the dynamic behaviour of combined conical-cylindrical shells containing the internal fluid and subjected to the supersonic flow. The hybrid finite element model developed in this paper is based on a combination of the finite element method and classical shell theory. The displacement functions are derived from exact solution of Sanders' shell equations. The linearized first-order piston theory is used in modelling the aerodynamic interaction effect. Dynamic pressure of internal liquid is calculated using the velocity potential, Bernoulli's equation, and applying the impermeability condition to ensure the permanent contact at the fluid-solid interface. Initial stress stiffening due to axial compression and/or radial pressure is also taken into consideration and is presented by an additional stiffness matrix. Results of this work are compared with those of other theories and experiments, good agreement is found.

Keywords: Aeroelasticity, conical-cylindrical shells, hybrid finite element

INTRODUCTION

The axisymmetric shells are widely used in many engineering applications e.g. aerospace industry. Their dynamic behaviour is considerably affected when they are in interaction with internal or surrounding fluids. Dynamic analysis of both cylindrical and conical shells has been investigated, experimentally and analytically, by numerous researchers [1-8]. The aerodynamic behaviour of a combined conical-cylindrical shell interacting with external supersonic air flow is a topic that has not been studied extensively in spite of its practical importance. This kind of combined-shell is found in fuselage of aircraft and spacecraft, missiles, storage tanks, and submarine hulls, to name a few. The objective of this work is to present a numerical model to analyze the aerodynamic behaviour of a combined conical-cylindrical shell containing internal fluid and subjected to external supersonic air flow. The solid model is a combination of finite element method and classical shell theory. Two distinct semi-analytical finite elements are used to model a combined axisymmetric shell for better geometrical consistency. The displacement functions of each finite element are derived from exact solutions of Sanders' shell equations. The linearized first-order piston theory formula is applied to model the aerodynamic interaction effect. For the liquid contained in the combined shell, the fluid pressure is derived from the velocity potential, Bernoulli equation and from the impermeability condition applied to ensure permanent coupling at the fluid-solid interface. Initial stress stiffening due to axial compression and/or radial pressure is accounted for, by generating an additional stiffness matrix. The elementary matrices of the solid and fluid

corresponding to each finite element are calculated using exact analytical integration. Because the presented model is derived from exact solution of the equilibrium equations of shells, the results calculated using this approach are remarkably accurate.

THEORY

The thin-walled shell depicted in Fig. 1 is modeled using two different finite elements. The structural formulation of both cylindrical and conical shells is based on a combination of Sanders' shell theory [9] and hybrid finite element model.

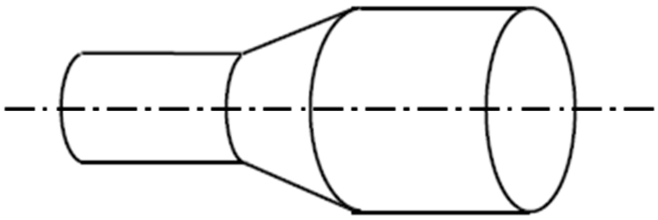

Fig. 1 - Combined conical-cylindrical shell

Structural modeling of solid cylindrical shell

The finite element model used for the cylindrical part is a cylindrical segment defined by two line-nodes (four degree of freedom) as shown in Fig. 2. The differential equations of cylindrical shells in term of axial, circumferential, and radial displacement and also material properties are given as:

$$L_k(u, v, w, p_{ij}) = 0; \quad k = 1,2,3 \quad and\ i = j = 1 \cdots 6 \tag{1}$$

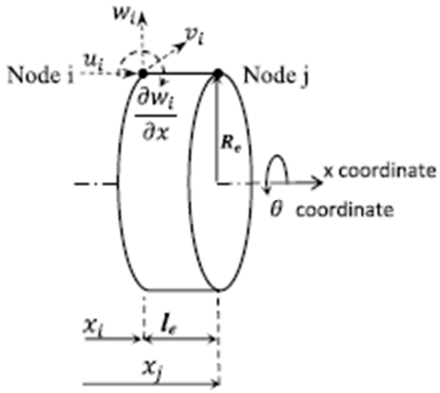

Fig. 2 - Geometry and nodal displacements of the cylindrical finite element

The differential operators L_k *(k=1, 2, 3)* and matrix of material properties $[p_{ij}]$ are given in [10]. The displacement functions are developed into Fourier series for the nth circumferential wave number:

$$\begin{Bmatrix} u(x,\theta) \\ w(x,\theta) \\ v(x,\theta) \end{Bmatrix} = \begin{bmatrix} \cos(n\theta) & 0 & 0 \\ 0 & \cos(n\theta) & 0 \\ 0 & 0 & \sin(n\theta) \end{bmatrix} \begin{Bmatrix} u(x) \\ w(x) \\ v(x) \end{Bmatrix} = [T_n] \begin{Bmatrix} u(x) \\ w(x) \\ v(x) \end{Bmatrix} \tag{2}$$

The magnitudes of displacements are function of the *'x'* only and are defined as follow [11]:

$$\{u(x) \quad w(x) \quad v(x)\}^T = \{A \quad B \quad C\}^T e^{\lambda x/R_e} \tag{3}$$

A, B, C, and λ are complex numbers, and R_e is the mean radius of the cylindrical finite element. Substitution of equations (2 and 3) into equation (1) and set the determinant of matrix of coefficients results in the following eighth order characteristic equation as:

$$a\lambda^8 + b\lambda^6 + c\lambda^4 + d\lambda^2 + e = 0 \tag{4}$$

The coefficients of *'a, b, c, d, and e'* are functions of material properties, geometry, and circumferential mode number. Each root of λ_i yields a solution of the equilibrium equation. The complete solution is the sum of the eight solutions as:

$$\begin{Bmatrix} u(x,\theta) \\ w(x,\theta) \\ v(x,\theta) \end{Bmatrix} = [T_n] \sum_{j=1}^{8} [I_{3\times3}]\, e^{\lambda_j x/R_e} \begin{Bmatrix} A_j \\ B_j \\ C_j \end{Bmatrix} = [T_n][R]\{C\}; \;\; where\ A_j = \alpha C_j\ and\ B_j = \beta C_j \tag{5}$$

Matrix *[R]* and vector {C} are given in [10]. Nodal displacement vector is given as:

$$\{\delta\}^e = \left\{u_i \quad w_i \quad \frac{\partial w_i}{\partial x} \quad v_i \quad u_j \quad w_j \quad \frac{\partial w_j}{\partial x} \quad v_j\right\}^T = [A]\{C\}; \quad \{C\} = [A]^{-1}\{\delta\}^e \tag{6}$$

Then equation (5) can be rewritten as:

$$\begin{Bmatrix} u(x,\theta) \\ w(x,\theta) \\ v(x,\theta) \end{Bmatrix} = [T_n][R][A]^{-1}\{\delta\}^e = [N]\{\delta\}^e \tag{7}$$

Matrix *[N]* of order (3 × 8) is the matrix of the displacement shape function of a cylindrical element shown in Fig. 2.

Structural modeling of solid conical shell

The finite element model used for the conical part of combined shell is a truncated cone with variable thickness defined by two nodal lines with four degrees of freedom as shown in Fig. 3. The differential equations of cylindrical shells in term of axial, circumferential, and radial displacement and also material properties are given as:

$$S_k(\overline{u}, \overline{v}, \overline{w}, b_{ij}) = 0; \quad k = 1,2,3 \quad and\ i = j = 1 \cdots 6 \tag{8}$$

The complete form of these equations is given in [12].

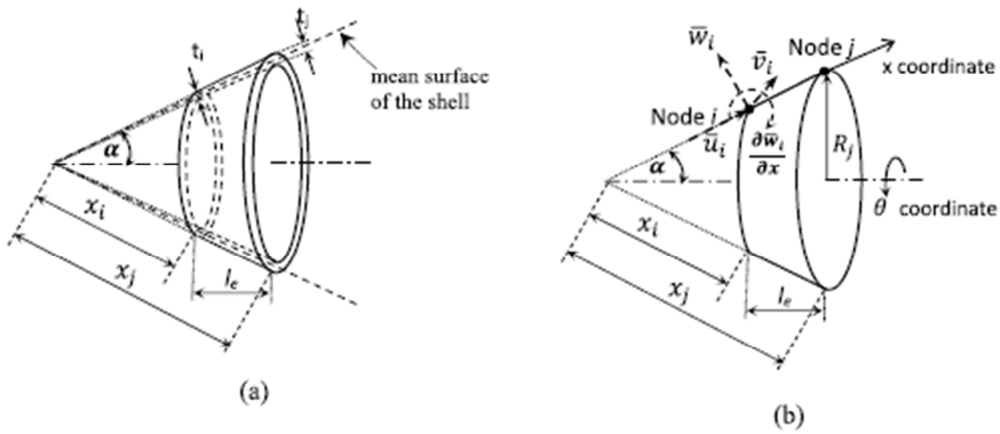

Fig. 3 - Conical finite element (a) geometry and thickness variation, (b) nodal displacements

Similar to cylindrical shells, the displacement functions of the conical finite element are expressed as a combination of Fourier series and finite element theory. The magnitudes of displacements are function of the *'x'* only and are defined as [6]:

$$\{\overline{u}(x) \quad \overline{w}(x) \quad \overline{v}(x)\}^T = \left(\frac{x}{l_e}\right)^{\frac{\overline{\lambda}-1}{2}} \{\overline{A} \quad \overline{B} \quad \overline{C}\}^T \tag{9}$$

A, B, C, and λ are complex numbers, and R_e is the mean radius of the cylindrical finite element. Substitution of equations (2 and 3) into equation (1) and set the determinant of matrix of coefficients results in the following eighth order characteristic equation as:

$\overline{A}, \overline{B}, \overline{C}, and\ \overline{\lambda}$ are unknown complex numbers and l_e is the length of the finite element in axial direction. Substitution of $\overline{u}(x), \overline{v}(x), and\ \overline{w}(x)$ into the equilibrium equations and set the determinant of matrix of coefficients results in an eighth order characteristic equations as:

$$h_8\overline{\lambda}^8 + h_6\overline{\lambda}^6 + h_4\overline{\lambda}^4 + h_2\overline{\lambda}^2 + h_o = 0 \tag{10}$$

The coefficients of h_j are given in [6].

Each root of this equation yields a solution to the equations of motion. The complete solution is obtained by adding the eight solutions independently with the constants $\overline{A}_j, \overline{B}_j, and\ \overline{C}_j\ (j = 1\ to\ 8)$.

The complete solution is the sum of the eight solutions; therefore the displacement functions are expressed as:

$$\begin{Bmatrix} \overline{u}(x,\theta) \\ \overline{w}(x,\theta) \\ \overline{v}(x,\theta) \end{Bmatrix} = [T_n][\overline{R}]\{\overline{C}\} = [T_n][\overline{R}][\overline{A}]^{-1}\{\overline{\delta}\}^e = [\overline{N}]\{\overline{\delta}\}^e \tag{11}$$

Matrices $[\overline{R}]\ and\ [\overline{A}]$are given in [6]. The vector $\{\overline{C}\}$ contains eight constants of the problem which is expressed as function of nodal displacements given as:

$$\{\overline{\delta}\}^e = \left\{\overline{u}_i \quad \overline{w}_i \quad \frac{\partial \overline{w}_i}{\partial x} \quad \overline{v}_i \quad \overline{u}_j \quad \overline{w}_j \quad \frac{\partial \overline{w}_j}{\partial x} \quad \overline{v}_j\right\}^T = [\overline{A}]\{\overline{C}\}; \quad \{\overline{C}\} = [\overline{A}]^{-1}\{\overline{\delta}\}^e \tag{12}$$

The mass and stiffness matrices of cylindrical and conical finite elements are given by the following equations:

$$Cylindrical\ shell: \begin{cases} [m_s]^e = \rho_s t[A]^{-T}\left(\pi R_e \int_0^{l_e}[R]^T[R]\,dx\right)[A]^{-1} \\ [k_s]^e = [A]^{-T}\left(\pi R_e \int_0^{l_e}[Q]^T[P][Q]\,dx\right)[A]^{-1} \end{cases} \tag{13}$$

$$Conical\ shell: \begin{cases} [\overline{m}_s]^e = \rho_s\left(\int_0^{l_e}[A]^{-T}\left[\overline{R}\right]^T[T_n]^T[T_n]\left[\overline{R}\right][A]^{-1}d\overline{A}\right) \\ \left[\overline{k}_s\right]^e = \left(\int_0^{l_e}[A]^{-T}\left[\overline{Q}\right]^T\begin{bmatrix}[T_n] & [0] \\ [0] & [T_n]\end{bmatrix}^T[P]\begin{bmatrix}[T_n] & [0] \\ [0] & [T_n]\end{bmatrix}\left[\overline{Q}\right]\left[\overline{A}\right]^{-1}d\overline{A}\right) \end{cases} \tag{14}$$

$$d\overline{A} = x sin(\alpha) d\theta dx$$

Initial stiffening effect

Stiffening effect due to in-plane loads is taken into account by adding a stiffness matrix to the elementary stiffness matrix of the solid shell.

The change in membrane strain energy of a cylindrical shell is defined as:

$$U_i = \frac{1}{2}\int_0^{2\pi}\int_0^{l_e}\left(N_x\phi_{\theta\theta}^2 + N_\theta\phi_{xx}^2 + (N_x + N_\theta)\phi_n^2\right)dA \tag{15}$$

Substitution of $N_x\ and\ N_\theta$ (membrane forces per unit length) and $\phi_{\theta\theta}, \phi_{xx}, and\ \phi_n$ (membrane strains) are given in [9] and then applying the variational approach, one could derive the stiffening matrix of cylindrical shell as:

$$[k_i]^e = \int_0^{2\pi}\int_0^{l_e}\left([N]^T[Y]^T\begin{bmatrix} N_x & 0 & 0 \\ 0 & N_\theta & 0 \\ 0 & 0 & N_x + N_\theta\end{bmatrix}[Y][N]\right)dA \tag{16}$$

Matrix $[N]$is the displacement shape function of cylindrical shell and [Y] is defined in the following equation:

$$\begin{bmatrix} 0 & -\frac{\partial}{\partial x} & 0 \\ 0 & -\frac{1}{R}\frac{\partial}{\partial\theta} & \frac{1}{R} \\ -\frac{1}{2R}\frac{\partial}{\partial\theta} & 0 & \frac{1}{2}\frac{\partial}{\partial x}\end{bmatrix}\begin{Bmatrix} u \\ w \\ v\end{Bmatrix} = [Y][N]\{\delta\}^e \tag{17}$$

The stiffness effect of a conical finite element is modeled using the same formulation applied for the cylindrical shell. The stiffness matrix is obtained as:

$$\left[\overline{k}_i\right]^e = \int_0^{2\pi}\int_0^{l_e}\left(\left[\overline{N}\right]^T\left[\overline{Y}\right]^T\begin{bmatrix} \overline{N}_x & 0 & 0 \\ 0 & \overline{N}_\theta & 0 \\ 0 & 0 & \overline{N}_x + \overline{N}_\theta\end{bmatrix}\left[\overline{Y}\right]\left[\overline{N}\right]\right)d\overline{A} \tag{18}$$

Matrix $[\overline{N}]$is the displacement shape function of cylindrical shell and $[\overline{Y}]$ is defined in the following equation:

$$\begin{bmatrix} 0 & -\frac{\partial}{\partial x} & 0 \\ 0 & -\frac{1}{x}\frac{1}{sin\alpha}\frac{\partial}{\partial\theta} & \frac{1}{xtan\alpha} \\ -\frac{1}{2xsin\alpha}\frac{\partial}{\partial\theta} & 0 & \frac{1}{2x}+\frac{1}{2}\frac{\partial}{\partial x} \end{bmatrix}\begin{Bmatrix}\overline{u}\\ \overline{w}\\ \overline{v}\end{Bmatrix} = [\overline{Y}][\overline{N}]\{\delta\}^e \tag{19}$$

Hydrodynamic effect of internal fluid

The mathematical formulation of the internal fluid is based on the following assumptions: (a) the internal fluid is incompressible; (b) the fluid flow is potential, (c) small deformation, (d) fluid is inviscid, and (e) the free surface is neglected.

Hydrodynamic effect on cylindrical shell

Taking into account the aforementioned assumptions, the velocity potential $\phi(x,\theta,r,t)$ of the internal fluid must satisfy the Laplace equation. This relation is expressed in the cylindrical coordinate system by:

$$\frac{1}{r}\frac{\partial}{\partial r}\left(r\frac{\partial\phi}{\partial r}\right)+\frac{1}{r^2}\frac{\partial^2\phi}{\partial\theta^2}+\frac{\partial^2\phi}{\partial x^2}=0 \tag{20}$$

$The\ x,\theta,and\ r$ are the coordinates in the axial, circumferential, and radial directions of cylinders, respectively. Using the fluid velocity components (axial, tangential, and radial), Bernoulli's equation, impermeability condition (to ensure a permanents contact between the shell surface and the peripheral fluid layer), and structural's radial displacement, we could obtain the fluid pressure equation as:

$$P|_{r=R} = -\rho_f\sum_{j=1}^{j=8}\frac{J_n(im_jr)}{\left[\frac{\partial}{\partial r}(J_n(im_jr))\right]}\frac{\partial^2 w_j}{\partial t^2} = -\rho_f\sum_{j=1}^{j=8}Z_j\frac{\partial^2 w_j}{\partial t^2} \tag{21}$$

$J_n(im_jr)$ is the Bessel function of first order. Taking integral of fluid dynamic pressure over structural shape function, we could derive the fluid-flow forcing function as:

$$\begin{cases}\{F\}^e = \int\{N\}^T\{P\}dA = -\rho_f\int\left([Z_f]^T[A]^{-T}[R]^T[T_n]^T[T_n][R_f][A_f]^{-1}\right)dA\{\ddot{\delta}\}^e \\ \{F\}^e = [A]^{-T}[S_f][A_f]^{-1}\{\ddot{\delta}\}^e = [m_f]\{\ddot{\delta}\}^e\end{cases} \tag{22}$$

Hydrodynamic effect on conical shell

Taking into account the aforementioned assumptions, the velocity potential $\overline{\phi}(x,\theta,r,t)$ of the internal fluid must satisfy the Laplace equation. This relation is expressed in the cylindrical coordinate system by:

$$\frac{2}{x}\frac{\partial\overline{\phi}}{\partial x}+\frac{\partial^2\overline{\phi}}{\partial x^2}\frac{1}{x^2(sin\beta)^2}\frac{\partial^2\overline{\phi}}{\partial\theta^2}+\frac{1}{x^2tan\beta}\frac{\partial\overline{\phi}}{\partial\beta}+\frac{1}{x^2}\frac{\partial^2\overline{\phi}}{\partial\beta^2}=0 \tag{23}$$

$The\ \beta$ is the coordinate along the cone semi-vertex angle (α ($0 \leq \beta \leq \alpha$), see Fig. 4.

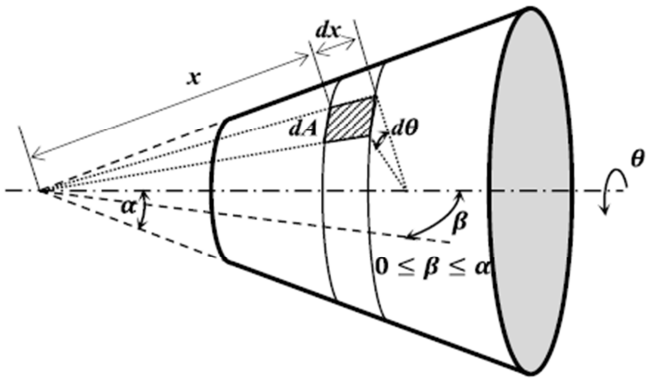

Fig. 4 - Fluid coordinates system of the conical section of the shell

Using the fluid velocity components (axial, tangential, and radial), Bernoulli's equation, impermeability condition (to ensure a permanents contact between the shell surface and the peripheral fluid layer), and structural's radial displacement, we could obtain the fluid pressure equation as:

$$P|_{\beta=\alpha} = -\rho_f kx \sum_{j=1}^{j=8} \frac{\partial^2 \overline{w}_j}{\partial t^2} \tag{24}$$

The factor 'k' is given in [13]. Taking integral of fluid dynamic pressure over structural shape function, we could derive the fluid-flow forcing function as:

$$\begin{cases} \{F\}^e = \int \{N\}^T \{P\} dA = -\rho_f \int \left(\left[\overline{A}\right]^{-T} \left[\overline{R}\right]^T [T_n]^T [T_n] \left[\overline{R}_f\right] \left[\overline{A}_f\right]^{-1} \right) dA \{\ddot{\delta}\}^e \\ \{F\}^e = \left[\overline{A}_f\right]^{-T} \left[\overline{S}_f\right] \left[\overline{A}_f\right]^{-1} \{\ddot{\delta}\}^e = \left[\overline{m}_f\right] \{\ddot{\delta}\}^e \end{cases} \tag{25}$$

Aerodynamic effect of supersonic flow

The fluid-structure effect due to external supersonic axial flow on a cylindrical shell is taken into account using linearized first order potential theory [14].

$$P_a = \frac{-\gamma P_\infty M^2}{(M^2-1)^{1/2}} \left[\frac{\partial w}{\partial x} + \frac{1}{U_\infty} \left(\frac{M^2-2}{M^2-1} \right) \frac{\partial w}{\partial t} - \frac{w}{2R(M^2-1)^{1/2}} \right]; where\ M = \frac{U_\infty}{\sqrt{\gamma P_\infty / \rho_\infty}} = \frac{U_\infty}{a_\infty} \tag{26}$$

The fluid pressure is a function of radial displacement of structure as a sum of eight solutions associated with eight roots of characteristic equations. Substitution of structural radial displacement for cylindrical shell into equation (26) results in the following relation for dynamic pressure:

$$P_a = \Gamma \left[\frac{1}{U_\infty} \left(\frac{M^2-2}{M^2-1} \right) [T_n] [R_f] [A_f]^{-1} \{\dot{\delta}\}^e + \left(i \frac{\lambda_j}{R_e} - \frac{1}{2R(M^2-1)^{1/2}} \right) [T_n] [R_f] [A_f]^{-1} \{\delta\}^e \right] \ where\ \Gamma = \frac{-\gamma P_\infty M^2}{(M^2-1)^{1/2}} \tag{27}$$

Integrating the dynamic pressure (27) over structural shape functions results in:

$$\begin{gathered} \{F\}^e = \left[c_f\right]^e \{\dot{\delta}\}^e + \left[k_f\right]^e \{\delta\}^e \\ where \\ \left[c_f\right] = [A]^{-T} \left(\frac{\pi R \Gamma}{U_\infty} \left(\frac{M^2-2}{M^2-1} \right) \int_0^{l_e} [R]^T \left[R_f\right] dx \right) \left[A_f\right]^{-1} \ and \\ [k] = [A]^{-T} \left(\pi R \Gamma \left(i \frac{\lambda_j}{R_e} - \frac{1}{2R(M^2-1)^{1/2}} \right) \int_0^{l_e} [R]^T \left[R_f\right] dx \right) \left[A_f\right]^{-1} \end{gathered} \tag{28}$$

Similarly, we could derive the damping and stiffness matrices, associated with aerodynamic loading, for a conical shell as:

$$\overline{P}_a = \Gamma\left[\frac{1}{U_\infty}\left(\frac{M^2-2}{M^2-1}\right)[T_n][\overline{R}_f][\overline{A}_f]^{-1}\left\{\dot{\overline{\delta}}\right\}^e + \left(i\frac{\lambda_j}{R_e} - \frac{1}{2R(M^2-1)^{1/2}}\right)[T_n][\overline{R}_f][\overline{A}_f]^{-1}\left\{\overline{\delta}\right\}^e\right] \; where\ \Gamma = \frac{-\gamma P_\infty M^2}{(M^2-1)^{1/2}} \quad (29)$$

$$\left\{\overline{F}\right\}^e = \left[\overline{c}_f\right]^e\left\{\dot{\overline{\delta}}\right\}^e + \left[\overline{k}_f\right]^e\left\{\overline{\delta}\right\}^e$$

$$where$$

$$\left[\overline{c}_f\right] = \left[\overline{A}\right]^{-T}\left(\frac{\Gamma}{U_\infty}\left(\frac{M^2-2}{M^2-1}\right)\int_{x_i}^{x_j}\int_0^{2\pi}\left(\left[\overline{A}\right]^{-T}\left[\overline{R}\right]^T[T_n]^T[T_n]\left[\overline{R}_f\right]\left[\overline{A}_f\right]^{-1}\right)d\overline{A}\right)\left[\overline{A}_f\right]^{-1} \; and$$

$$\left[\overline{k}_f\right] = \left[\overline{A}\right]^{-T}\left(\int_{x_i}^{x_j}\int_0^{2\pi}\left(\left[\overline{A}\right]^{-T}\left[\overline{R}\right]^T[T_n]^T[T_n]\frac{\partial\left[\overline{R}_f\right]}{\partial x}\left[\overline{A}_f\right]^{-1}\right)d\overline{A}\right)\left[\overline{A}_f\right]^{-1} - \quad (30)$$

$$\left[\overline{A}\right]^{-T}\left(\int_{x_i}^{x_j}\int_0^{2\pi}\left(\frac{1}{2R_m(M^2-1)^{1/2}}\left[\overline{A}\right]^{-T}\left[\overline{R}\right]^T[T_n]^T[T_n]\left[\overline{R}_f\right]\left[\overline{A}_f\right]^{-1}\right)d\overline{A}\right)\left[\overline{A}_f\right]^{-1}$$

Eigenvalue problem

The dynamic behaviour of coupled fluid-structure system is given by the following equation that is derived by introducing the matrices of each individual element into the global system and then introducing the boundary conditions.

$$\left[[M_s] - [M_f]\right]\{\ddot{\delta}\} + [c_f]\{\dot{\delta}\} + \left[[K_s] - [K_f] - [K_l]\right]\{\delta\} = \{0\} \quad (31)$$

Similarly, we could derive the damping and stiffness matrices, associated with aerodynamic loading, for a conical shell as:

RESULTS

The convergence test is the first example that is conducted for a combined conical-cylindrical shell using four semi-vertex angles of conical section (Fig. 5) to study how geometry of combined shell could affect the requisite mesh size.

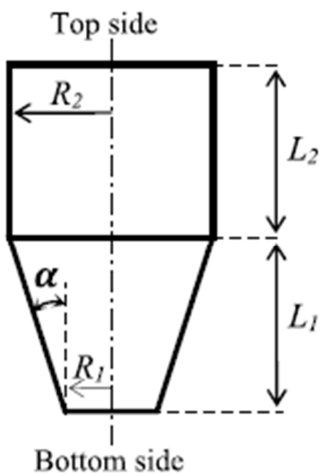

Fig. 5 - Geometric shape and dimensions of the combined conical-cylindrical shell

Data used for this example are (L_1=0.75m, L_2=0.75m, R_1=0.12m, t=5mm, α=5°, 20°, 35°, and 45°, E=69GPa, ν=0.3, and ρ_s=2700kg/m^3). The results are shown in Fig. 6.

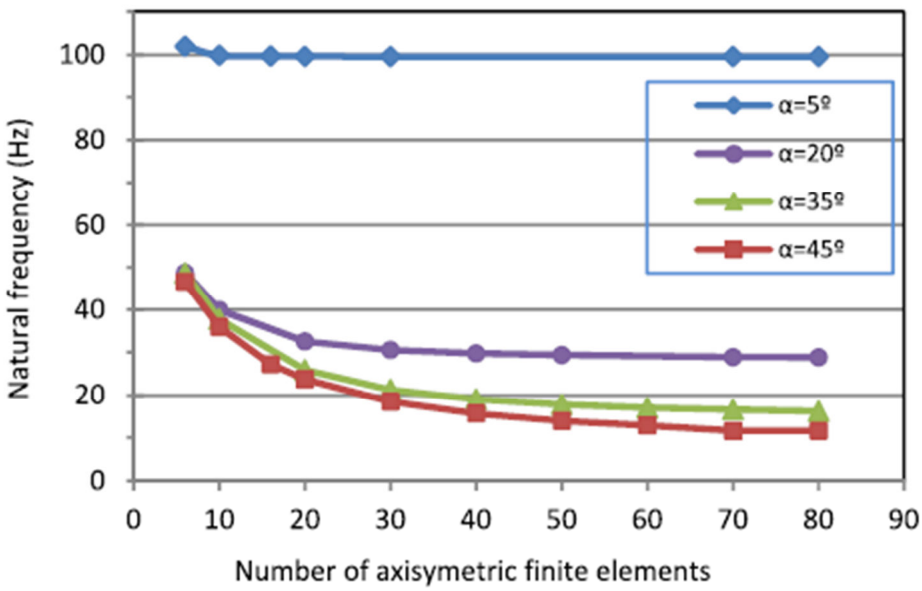

Fig. 6 - Natural frequencies (n=2 and m=1) of a clamped-free combined conical-cylindrical shell as a function of number of elements and semi-vertex angle

The second example is carried out for an in-vacuo conical-cylindrical shell with clamped boundary conditions. ($\alpha=30^o$, $L_2/R_2=1$, $t/R_2=0.01$, $R_1/R_2=0.4226$, $E=211GPa$, $\nu=0.3$, $\rho_s=7800kg/m^3$). The results of the present method are compared with those of (Caresta et al.) calculated for the same structure. The results are listed in Table 1 for dimensionless natural frequency $\Omega = \omega/\omega_o$; $\omega_o = \sqrt{E/\rho_s(1-\nu^2)}/R_2$.

Table 1 - Frequency parameters for a clamped conical-cylindrical shell

Mode Number (m, n)	**n=1**	**n=2**	**n=3**	**n=4**
m=1	0.294 (0.293)	0.104 (0.100)	0.090 (0.087)	0.145 (0.144)
m=2	0.631 (0.637)	0.104 (0.503)	0.090 (0.391)	0.329 (0.330)
m=3	0.812 (0.811)	0.104 (0.691)	0.090 (0.514)	0.396 (0.395)
m=4	0.932 (0.931)	0.104 (0.859)	0.090 (0.797)	0.646 (0.647)
m=5	0.950 (0.952)	0.104 (0.916)	0.090 (0.919)	0.693 (0.693)

The numbers in parenthesis are results of [15].

The next example is dealing with dynamic analysis of a clamped combined shell ($\alpha=50^o$, $L_1=0.75m$, $L_2=0.75m$, $R_1=0.12m$, $t=1mm$) under influence of internal static pressure. The shell thickness has been intentionally reduced here to properly highlight the initial stiffening effect. The frequencies obtained using the present model (Fig. 7) are validated by comparing with those calculated using an excessive number of ANSYS finite element "SHELL281 with option of PSTRES ON", a very good agreement is achieved. Fig. 7 also shows the natural frequencies for the same structure under radial pressure with semi-vertex angle zero.

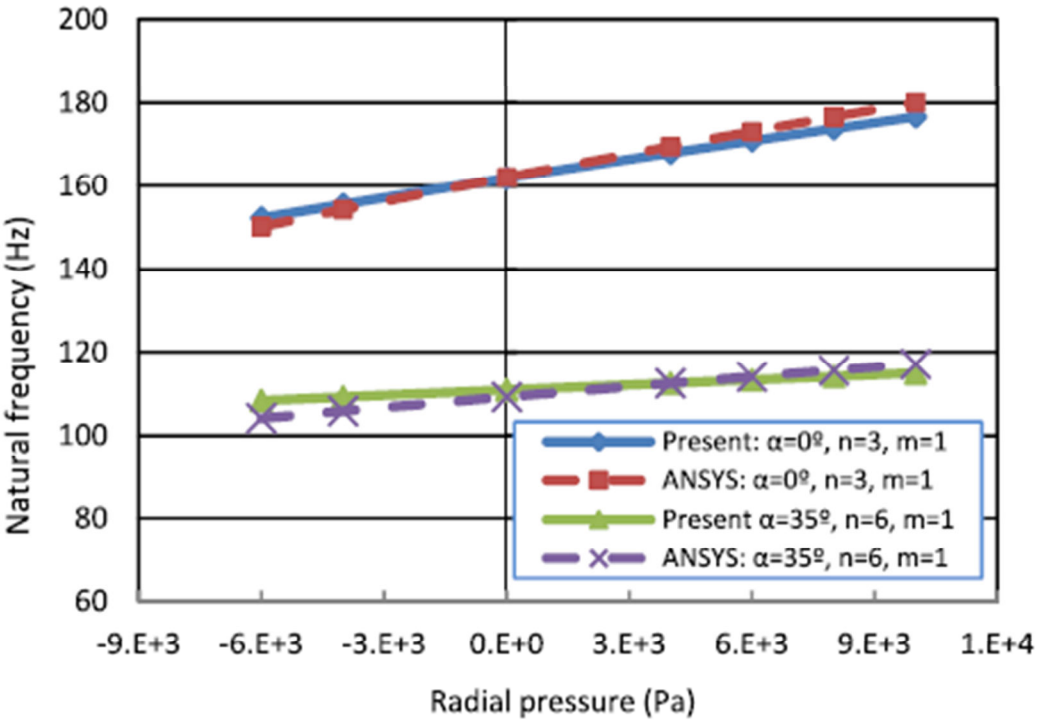

Fig. 7 - Natural frequencies of a combined shell

The last example is carried out for a truncated conical shell ($R/t=148$, $L/R=8.13$, $t=0.051in$, $\alpha=5^o$, $E=6.5\times10^6$ psi, $v=0.29$, $\rho_s=8.33\times10^{-4}$ $lb.s^2/in^4$, and $M=3$); simply supported at both ends and subjected to a supersonic flow. Fig. 8 shows the real and imaginary parts of eigenvalues as a function of the freestream static pressure. The results of the present method are compared with those of [13]. The real part of natural frequency coalescences into a single mode and dynamic instability occurs at the same freestream static pressure as in reference [13].

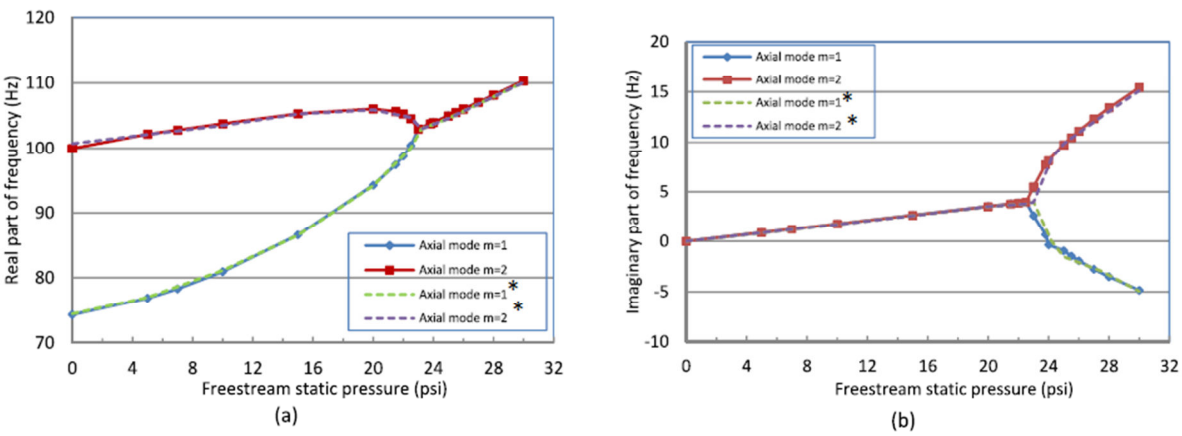

Fig. 8 - Frequency variation as a function of freestream static pressure at circumferential mode (n=6), (* Results of Sabri et al.)

CONCLUSION

An efficient semi-analytical method has been developed for aeroelastic analysis of combined conical-cylindrical shells (empty, fluid-filled, and subjected to external supersonic flow). A combination of Sanders' shell theory, the first-order-piston theory, and potential theory is used in deriving the equations of motion. The effect of various physical and geometrical parameters on structural dynamic stability is studied. Numerical results indicate that the flutter resistance is significantly affected in case of internally pressurized shells. Flutter boundary occurs at a lower dynamic pressure once the vertex angle decreases. The proposed method could present reliable results at less computational costs compare to commercial software.

REFERENCES

[1]-Lindholm U. S., Kana D. D., Abramson H., Breathing vibrations of circular cylindrical shells with internal fluid Journal of Aerospace Science, 1962, 29 (9), p. 1052-1059.

[2]-Lakis A. A., Paidoussis M. P., Prediction of the response of a cylindrical shell to arbitrary or boundary-layer-induced random pressure field, J. of Sound and Vibration, 1972, 25 (1), p. 1-27

[3]-Amabili M., Pellicano F., Paidoussis M. P., Non-linear dynamics and stability of circular cylindrical shells containing flowing fluid, Part I: stability. Journal of Sound and Vibration, 1999, 225, p. 655-699.

[4]-Amabili M., Pellicano F., Paidoussis M. P., Non-linear dynamics and stability of circular cylindrical shells containing flowing fluid, Part IV: large-amplitude vibrations with flow. Journal of Sound and Vibration, 2000, 237, p. 641-666.

[5]-Toorani M. H., Lakis A. A., Dynamic analysis of anisotropic cylindrical shells containing fluid. Journal of Pressure Vessel Technology, 2001, 123, p. 454-460.

[6]-Kerboua Y., Lakis A. A., Hmila M., Vibration analysis of truncated conical shells subjected to flowing fluid. Applied Math. Modelling, 2010, 34 (3), p. 791-809

[7]-Lakis A. A., Van Dyke P., Ouriche H., Dynamic analysis of anisotropic fluid-filled conical shells. J. of Fluids and Structures, 1992, 6 (2), p. 135-162.

[8]-Senthil-Kumar D., Ganesan N., Dynamic analysis of conical shells conveying fluid. Journal of Sound and Vibration, 2008, 310, p. 38-57.

[9]-Sanders J. L., An improved first-approximation theory for thin shells, NASA TR-24, 1959.

[10]-Selmane A., Lakis A. A., Vibration analysis of anisotropic open cylindrical shells subjected to a flowing fluid. Journal of Fluids and Structures, 1997, 11, p. 111-134.

[11]-Lakis A. A., Paidoussis M. P., Dynamic analysis of axially non-uniform thin cylindrical shells, Journal of Mech. Eng. Sci., 1972, 14 (10, p. 49-71.

[12]-Lakis A. A., Ourich H., Dynamic analysis of anisotropic conical shells. Technical Report: Ecole Polytechnique of Montreal, 1986, EPM/RT-86-36.

[13]-F. Sabri, A. A. Lakis, Hybrid finite element method applied to supersonic flutter of an empty or partially liquid-filled truncated conical shell, J. of Sound and Vibration, 2010, 329(3), p. 302-316.

[14]-Dowell E. H., Aeroelasticity of plates and shells, Noordhoff International Publishing, Leyden, 1975.

[15]-M. Caresta, N.J. Kessissoglou, Free vibrational characteristics of isotropic coupled cylindrical-conical shells, J. of Sound and Vibrations, 2010, 329, p. 733-751.