Proceedings of the 7th International Conference on Mechanics and Materials in Design,
Albufeira/Portugal 11-15 June 2017. Editors J.F. Silva Gomes and S.A. Meguid.
Publ. INEGI/FEUP (2017)

PAPER REF: 6647

ON THE EVALUATION OF THE PEAK CONTACT STRESSES IN A PRESS-FITTED SHAFT-HUB COUPLING SUBJECT TO BENDING

Enrico Bertocchi(*), Sara Mantovani, Andrea Baldini, Antonio Strozzi
"Enzo Ferrari" Department of Engineering, University of Modena and Reggio Emilia, Modena (Italy)
(*)*Email:* ebertocchi@unimore.it

ABSTRACT

The peak contact stresses are addressed that are developed from the frictionless press fit of a shaft subjected to bending into an elastically similar hub with bore rounded edges. The non-linear behavior of this progressive contact is addressed by scaling a local solution available from the literature, with the aid of intermediate, auxiliary problems extracted from the fracture mechanics realm. The title problem being linear on the global domain with both the bending couple and the interference, this problem is solved by combining the FE forecasts obtained for two separate load cases, i.e. a) the interference alone and, b) the bending couple alone. Such results are expressed in terms of a) stress intensity factors for the auxiliary FM problems, and b) hoop strain component, as sampled in the proximity of the indenting edge for both the mating members. Design formulae for the contact stresses are proposed, that account for various normalized geometrical parameters, such as the outer to inner hub radii ratio, the radius of the hub bore fillet, and the contact length. Comprehensive coefficient tables are provided as well. Finally, an error analysis for the proposed method is presented.

Keywords: shaft-hub coupling, interference-fitting, progressive contact, design formulae.

INTRODUCTION

The shaft-hub coupling of Fig. 1a is considered, subject to the combined actions of a radial interference Δr, and of a bending couple C. An analogous problem has been addressed in (Strozzi, 2016), and, in the absence of couple, in (Strozzi, 2011), leading to a set of handy design charts. In the present contribution such problem is conveniently rationalized by adapting the methodology developed under plane strain conditions in (Strozzi 2015), and successfully employed in the case of a rounded edge elastomeric seal (Strozzi, 2016). In particular, the local, plane solution obtained in (Sackfield, 2003) is scaled on the basis of a) two auxiliary Fracture Mechanics problems, b) the dimensional considerations in (Leblond, 1999), c) the stress singularity equivalence between plane strain and axisymmetric, generally loaded problems (Yosibash, 1995), and d) dedicated Finite Element investigations (Wilson, 1965). Further details are here omitted for brevity, and they will be treated in the full paper.

RESULTS AND CONCLUSIONS

A practical design formula of ample validity is obtained, based on an attentive problem rationalization. System complexity is handled by compiling influence coefficient tables of prompt access.

A favourable error analysis has been performed by comparing design formula results with computationally expensive, nonlinear FE forecasts. An error is evidenced on the $p^{+}_{\max}$ peak

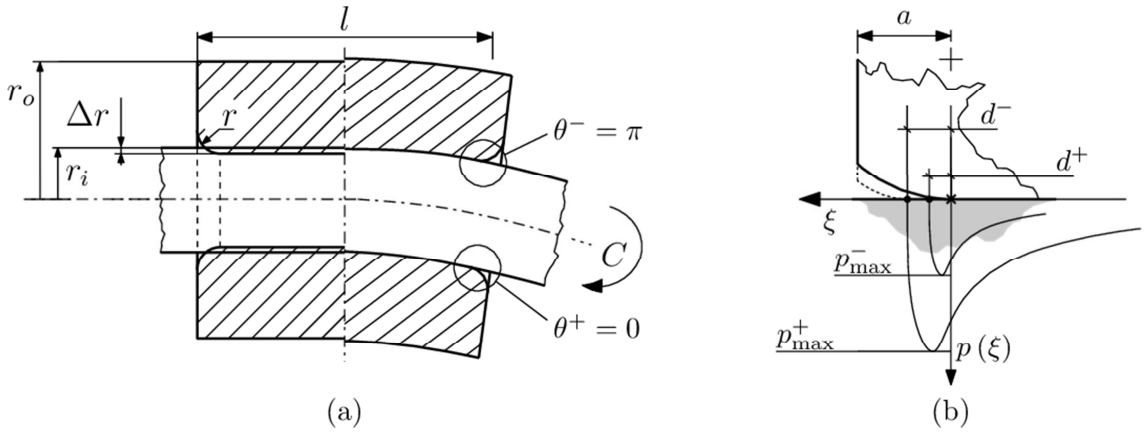

Fig. 1 - The title problem including nomenclature (a), and the axial pressure profile at two antipodal points along the rounded edge, at which the bending moment positively or negatively interacts with the interference preload (b).

pressure (see Fig. 1b) which is generally lower than 10 per cent. Such error is mainly ascribable to the progressively imperfect decoupling of the global and the local solutions as the pressure peak becomes comparable with its Lamé reference counterpart.

REFERENCES

[1]-Leblond J.-B., Mouro P., Crack propagation from a preexisting flaw at a notch root. Comptes Rendus de l'Académie des Sciences-Series IIB-Mechanics-Physics-Astronomy, 1999, 327, p. 581-587.

[2]-Sackfield A., Mugadu A., Barber J., Hills D., The application of asymptotic solutions to characterising the process zone in almost complete frictionless contacts. Journal of the Mechanics and Physics of Solids, 2003, 51, p. 1333-1346.

[3]-Strozzi A., Baldini A., Giacopini M., Bertocchi E., Bertocchi L., Normalization of the stress concentrations at the rounded edges of a shaft-hub interference fit. The Journal of Strain Analysis for Engineering Design, 2011, 46, p. 478-491.

[4]-Strozzi A., Bertocchi E., Baldini A., Giacopini M., On the applicability of the Boussinesq influence function in modelling the frictionless elastic contact between a rectangular indenter with rounded edges and a half-plane. Proceedings of the Institution of Mechanical Engineers, Part C: Journal of Mechanical Engineering Science, 2015, 229, p. 987-1001.

[5]-Strozzi A., Bertocchi E., Baldini A., Mantovani S., Normalization of the stress concentrations at the rounded edges of an interference fit between a solid shaft subjected to bending and a hub. Mechanics Based Design of Structures and Machines, 2016, 44, p. 405-425.

[6]-Strozzi A., Bertocchi E., Mantovani S., Giacopini M., Baldini A., Analytical evaluation of the peak contact pressure in a rectangular elastomeric seal with rounded edges. The Journal of Strain Analysis for Engineering Design, 2016, 51, p. 304-317.

[7]-Wilson E. L., Structural analysis of axisymmetric solids. AIAA Journal, 1965, p. 2269-2274.

[8]-Yosibash Z., Szabó B., The solution of axisymmetric problems near singular points and computation of stress intensity factors. Finite elements in analysis and design, 1995, 19, p. 115-129.