Proceedings of the 7th International Conference on Mechanics and Materials in Design,
Albufeira/Portugal 11-15 June 2017. Editors J.F. Silva Gomes and S.A. Meguid.
Publ. INEGI/FEUP (2017)

PAPER REF: 6760

FORCE BASED SYSTEM FOR ALIGNMENT OF AN UNIFORM LOADING OF A HYDROGENERATOR FOOT STEP BEARING

Jan Chvojan(*), Jaroslav Václavík
Dynamic Testing Laboratory, Výzkumný a zkušební ústav Plzeň s.r.o., Czech Republic
(*)*Email:* chvojan@vzuplzen.cz

ABSTRACT

This work describes the design and long-time application of the mechanism for uniform vertical force adjusting of the hydro generator foot step support bearing. The system is installed at pumped storage hydro plant Ružín in Slovakia. The feature of the system is described and the static and dynamic measurements during bearing adjustments and hydro plant operation during several decades are presented, as well.

Keywords: hydro-generator, axial force, axial bearing, support bearing, force adjustment.

INTRODUCTION

The hydraulic power plant Ružín was designed as pump storage device at the water dam on the river Hornád in eastern Slovakia. The production devices are formed from two hydro generators TG1 and TG2 in two- machine arrangement: motor - generator, turbine - pump, connected with fixed clutch. The vertical synchronous generators ŠKODA are equipped with closed-circuit cooling. The support bearing is combined with the leading one and is laid on the supporting cone supported with the turbine cover. The generator stator is positioned in the shaft. The generator support bearing is situated in one oil can underneath the rotor of the generator. The slide support bearing is twelve - segmented with reversed function and is equipped with high-pressure injection pump for start-up simplification. The outer diameter of the bearing is 1900 mm and the total loading from the rotating parts is 230 t.

A special elastic system for vertical adjustment of the bearing was designed, which is presented in Fig. 1. Each guide block is supported with the thrust pin. The vertical position of the pin is controlled with the nut, supporting the pin. The nut is screwed to the thin-wall tube, hinged with its upper part on the stator body. The tube is acting as an elastic piece, just contributing to better distribution of the rotor mass to particular segments. The second role of the tubes is to measure this particular force. For this purpose, each tube was provided with two XY strain gauges against each other, just forming the load cell. Each strain gauge installation was covered with protected layer. The calibration of these cells had been performed before the stator assembly was done. The cables from each tube are led to the housing, situated outside the oil tank, which is provided with connector, enabling the connection with measuring unit.

RESULTS AND CONCLUSIONS

After each base repair or adjustment of the rotor position, the adjustment of the position of the leading segments has to be performed. In addition to this, the dynamic measurement of the

forces during hydro generator operation is measured an analysed during the first hours after start-up to ensure the proper distribution of forces is kept after the static adjustment.

The static adjustment of the segments is made manually with the use of the adjusting nut at the lifted rotor in several steps. After each particular adjustment, the rotor has to be laid up and new measurement has to be performed. A special procedure for quick adjustment in small step was designed. In the end, the nuts are fastening with the bolt against releasing.

An example of the weight distribution before and after adjustment at 12 segments S1 to S12 is presented in Fig. 2. The dashed line represents the situation before the adjustment and the solid one represents the final state. The weight distribution should be inside the 5% tolerance limit.

More results including the dynamic tests will be obtained in full paper. The system has the full functionality over 15 years.

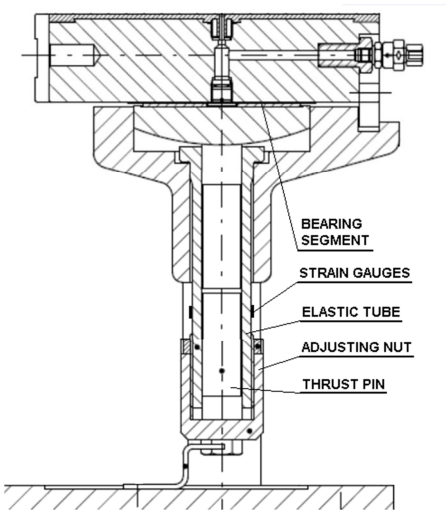

Fig. 1 - System for bearing segment adjustment

Fig. 2 - Percentage segment weight distribution

ACKNOWLEDGMENTS

The article has originated in the framework of the institutional support for the long-term conceptual development of the research organization.

REFERENCES

[1]-Kotas M, Bártík J. Support bearings TG1 and TG2 of pumped storage hydro plant Ružín I dynamical measurements. Testing report 791/2002, VZÚ Plzeň, 2002, in Czech.

[2]-Václavík J., Bártík H. Adjustment of the support bearing of the aggregate TG2 and functionality verification of the measurement system of TG1 in pumped storage hydro plant Ružín I. Technical report VYZ-TZ-54/16/018, VZÚ Plzeň, 2016, in Czech.