Universidade do Porto
Faculdade de Engenharia
FEUP

Comunicações Móveis

Licenciatura em Engenharia Electrotécnica e de Computadores
Licenciatura em Engenharia Informática e Computação

# Mobile Communication Systems: GSM
## Global System for Mobile Communication

**Mário Jorge Leitão**

Partially adapted with permission from
**Mobile Communication: Wireless Telecommunication Systems - Jochen Schiller**
http://www.jochenschiller.de

## Overview

GSM

- formerly: Groupe Spéciale Mobile (founded 1982)
- now: Global System for Mobile Communication
- Pan-European standard (ETSI, European Telecommunications Standardisation Institute)
- simultaneous introduction of essential services in three phases by the European telecommunication administrations
- seamless roaming within Europe possible
- today many providers all over the world use GSM (more than 180 countries in Asia, Africa, Europe, Australia, America)
- more than 900 million subscribers
- more than 70% of all digital mobile phones use GSM

## Performance characteristics of GSM

Communication
- mobile, wireless communication; support for voice and data services

Total mobility
- international access, chip-card enables use of access points of different providers

Worldwide connectivity
- one number, the network handles localization

High capacity
- better frequency efficiency, smaller cells, more customers per cell

High transmission quality
- high audio quality and reliability for wireless, uninterrupted phone calls at higher speeds (e.g., from cars, trains)

Security functions
- access control, authentication via chip-card and PIN



## Mobile Services

GSM services
- basic services
  - voice services
  - data services
  - short message service
- additional services
  - emergency number
  - group 3 fax
  - electronic mail
- supplementary services
  - identification: forwarding of caller number
  - suppression of number forwarding
  - automatic call-back
  - conferencing with up to 7 participants
  - ...

# Basic Services

- Services are supported by traffic channels
  - full rate: 22.8 kbit/s (gross bit rate, unprotected transmission)
  - half rate: 11.4 kbit/s (gross bit rate, unprotected transmission)
- Voice services (speech coding with protection)
  - full rate: 13 / 12.2 kbit/s (original coder / enhanced full rate coder)
  - half rate: 5.6 kbit/s (enhanced half rate coder)
- Data services (coding with different levels of protection)
  - full rate: 9.6 / 4.8 / 2.4 kbit/s
  - half rate: 4.8 / 2.4 kbit/s
- Enhanced data services
  - HSCSD (High Speed Circuit Switched Data)
    - *n* X 14.4 / *n* X 9.6 / *n* X 4.8 kbit/s (*n*=1, 2, 3, 4)
  - GPRS (General Packet Radio Service)
    - various rates (typically up to 53.6 kbit/s)



# GSM architecture: PLMN - Public Land Mobile Network

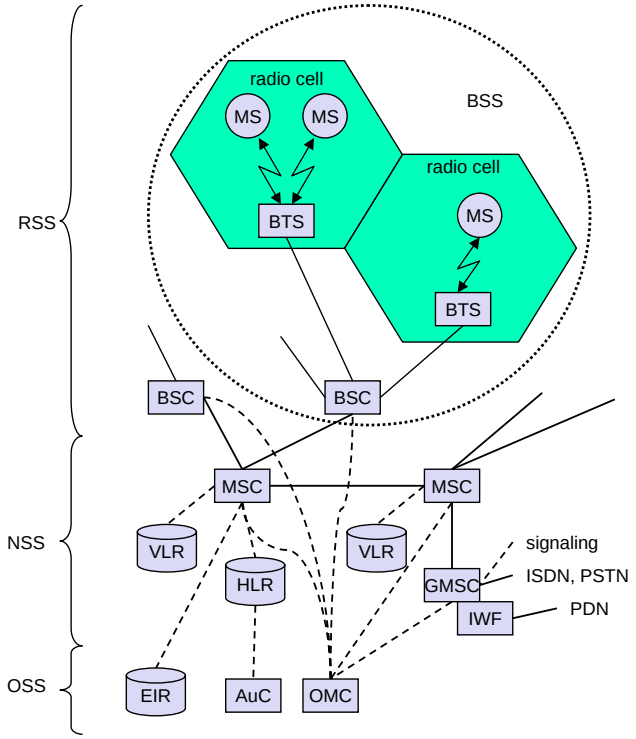

# GSM architecture: PLMN - Public Land Mobile Network

RSS - Radio Subsystem: covers all radio aspects

- MS Mobile Station — Mobile terminal equipment
- BSC Base Station Controller — Management of several BTS and MS
- BTS Base Transceiver Station — Transmitter, receiver and antennas

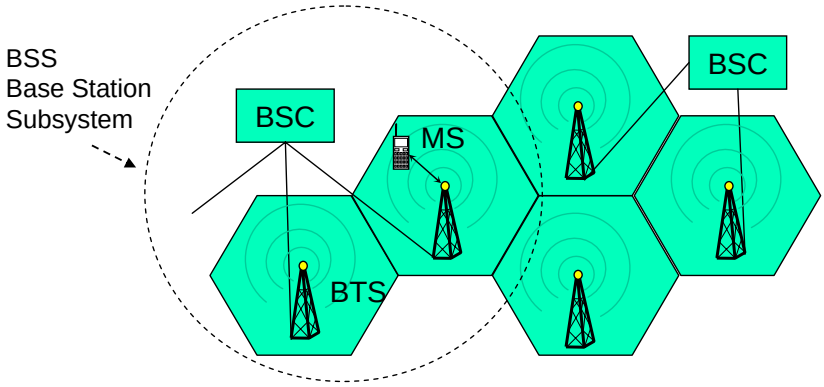




# GSM architecture: PLMN - Public Land Mobile Network

NSS - Network Subsystem: switching, mobility management, interconnection to other networks, system control

- MSC Mobile Switching Centre — Management of all connections
- HLR Home Location Register — Associated to each PLMN
- VLR Visitor Location Register — Associated to each MSC
- GMSC Gateway MSC — MSC providing interconnection to other networks

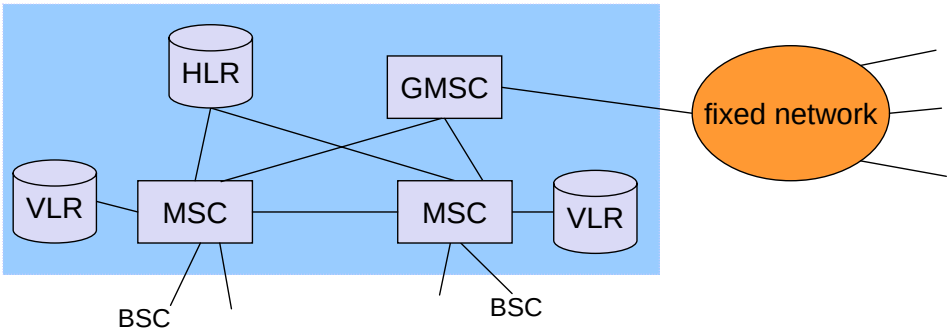

# GSM architecture: PLMN - Public Land Mobile Network

OSS - Operation Subsystem: centralized operation, management, and maintenance of all GSM subsystems

- OMC — Operation and Management Centre — Control of the radio and network subsystems
- AuC — Authentication Centre — Security functions
- EIR — Equipment Identity Register — Mobile station registration

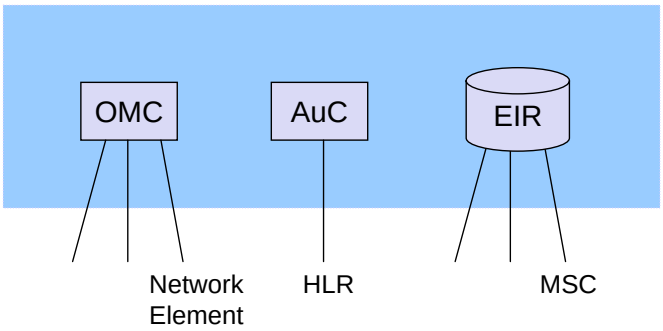




# GSM architecture: interfaces

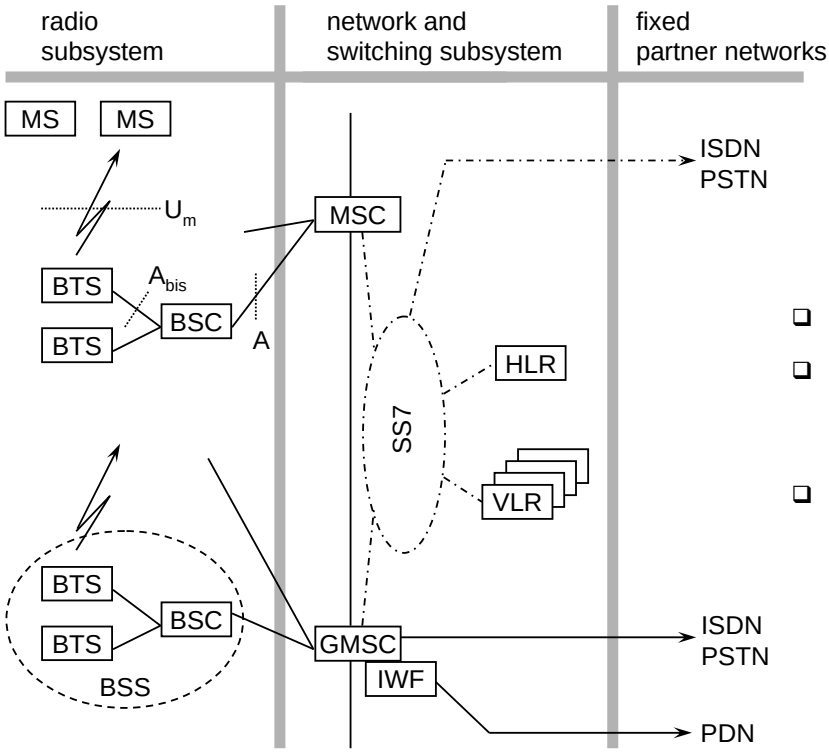


**Interfaces**

- $U_m$ : radio interface
- $A_{bis}$ : standardized, open interface with 16/64 kbit/s user channels
- *A*: standardized, open interface with 64 kbit/s user channels

# Voice transcoding and rate adaptation

- Need for transcoding and rate adaptation
  - BTS - 13 kbit/s air-interface (original coder)
  - MSC - 64 kbit/s ISDN type switching (PCM, A-law)

- 3 options for Transcoding and Rate Adapter Unit (TRAU)

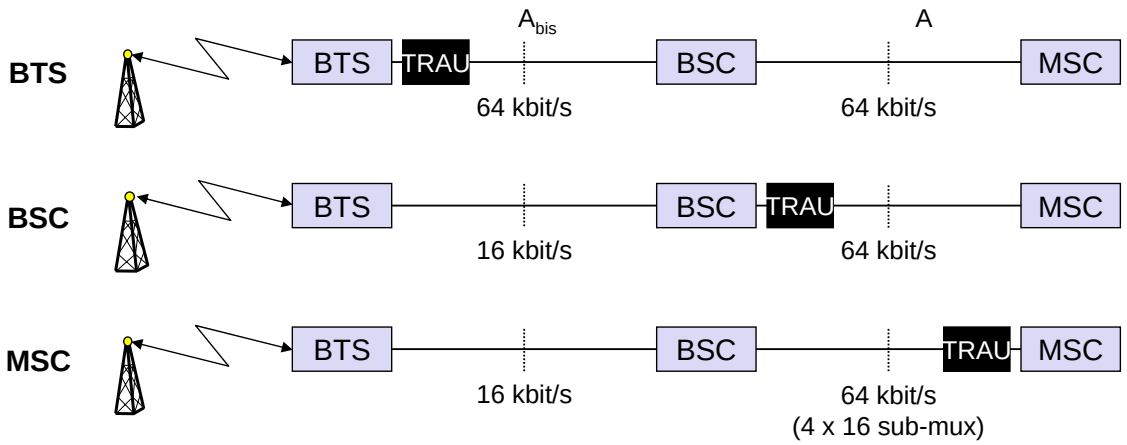




# Mobile addresses

- Several mobile numbers are needed
  - IMSI - International Mobile Subscriber Identity

    **Mobile Country Code (MCC) + Mobile Network Code (MNC) + Mobile Subscriber Identification Number (MSIN)**

    - uniquely identifies the user (SIM card)
  - TMSI - Temporary Mobile Subscriber Identity

    **32 bits**

    - local number allocated by VLR, may be changed periodically
    - hides the IMSI over the air interface - transmitted instead of IMSI
  - MSRN - Mobile Station Roaming Number

    **Visitor Country Code (VCC) + Visitor National destination Code (VNDC) + Current MSC code + temporary subscriber number**

    - generated by VLR for all visiting users
    - helps HLR to determine current location area
    - hides the IMSI inside the network

## Mobile station functional groups

- MT (Mobile Termination)
  - offers common functions used by all services the MS offers
  - end-point of the radio interface (Um) - equivalent to NT of an ISDN access
  - hides GSM radio specific characteristics
- TE (Terminal Equipment)
  - peripheral device of the MS, offers services to a user
- TA (Terminal Adapter)
  - interfaces MT with different types of terminal

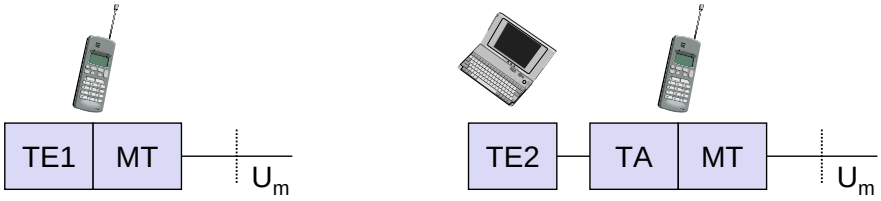




## Mobile station functional groups

- SIM card (Subscriber Identity Module)
  - uniquely associated to a user
  - stores user and location addresses
    - IMSI - International Mobile Subscriber Identity
    - TMSI - Temporary Mobile Subscriber Identity
    - LAI - Location Area Identification
  - supports authentication and encryption mechanisms
    - PIN - Personal Identity Number
    - PUK - PIN Unblocking Key
    - $K_i$ - subscriber secret authentication key
    - A3 - authentication algorithm
    - A8 - cipher key generation algorithm
  - contains personal data
    - list of subscribed services
    - RAM for user directory, SMS

## Base transceiver station and base station controller

- Tasks of a BSS are distributed over BSC and BTS
  - BTS comprises radio specific functions
  - BSC is the switching center for radio channels
    - switch calls from MSC to correct BTS

| Functions | BTS | BSC |
|---|---|---|
| Management of radio channels | | X |
| Frequency hopping (FH) | X | X |
| Management of terrestrial channels | | X |
| Mapping of terrestrial onto radio channels | | X |
| Channel coding and decoding | X | |
| Rate adaptation | X | |
| Encryption and decryption | X | X |
| Paging | X | X |
| Uplink signal measurements | X | |
| Traffic measurement | | X |
| Authentication | | X |
| Location registry, location update | | X |
| Handover management | | X |



## Mobile switching center

- The MSC (mobile switching center) plays a central role in GSM
  - switching functions
  - additional functions for mobility support
  - management of network resources
  - interworking functions via Gateway MSC (GMSC)
  - integration of several databases
- Specific functions of a MSC
  - switching of 64 kbit/s channels
  - paging and call forwarding
  - termination of SS7 (signaling system no. 7)
  - mobility specific signaling
  - location registration and forwarding of location information
  - support of short message service (SMS)
  - generation and forwarding of accounting and billing information

## Location registers

- Database requirements
  - scalability
  - high capacity
  - low delay

- Home Location Register (HLR)
  - central master database
    - data from every user that has subscribed to the operator
    - one database per operator
    - may be replicated
  - subscriber data
    - IMSI - International Mobile Subscriber Identity
    - list of subscribed services with parameters and restrictions
  - location data
    - current MSC/VLR address



## Location registers

Visitor Location Register (VLR)

- local database
  - data about all users currently in the domain of the VLR
  - includes roamers and non-roamers
  - associated to each MSC
- subscriber identity
  - IMSI - International Mobile Subscriber Identity
- temporary location
  - LAI - Location Area Identification
- temporary addresses
  - MSRN - Mobile Station Roaming Number
  - TMSI - Temporary Mobile Subscriber Identity

## GSM location / mobile addresses: summary

| HLR - Home Location Register | |
|---|---|
| Permanent | IMSI - International Mobile Subscriber Identity |
| Temporary | MSRN - Mobile Station Roaming Number |

| VLR - Visitor Location Register | |
|---|---|
| Permanent | IMSI - International Mobile Subscriber Identity |
| Temporary | LAI - Location Area Identification<br>MSRN - Mobile Station Roaming Number<br>TMSI - Temporary Mobile Subscriber Identity |

| SIM - Subscriber Identity Module | |
|---|---|
| Permanent | IMSI - International Mobile Subscriber Identity |
| Temporary | LAI - Location Area Identification<br>TMSI - Temporary Mobile Subscriber Identity |



## Operation subsystem elements

Authentication Center (AuC)

- associated to HLR
- search key: IMSI
- supports authentication and encryption mechanisms
  - $K_i$ - subscriber secret authentication key
  - A3 - authentication algorithm
  - A8 - cipher key generation algorithm

Equipment Identity Register (EIR)

- stores mobile stations IMEI (International Mobile Equipment Identity)
- white list - mobile stations allowed to connect without restrictions
- black list - mobile stations locked (stolen or not type approved)
- gray list - mobile stations under observation for possible problems

Operation and Maintenance Center (OMC)

- control capabilities for the radio and the network subsystems

# GSM - TDMA/FDMA

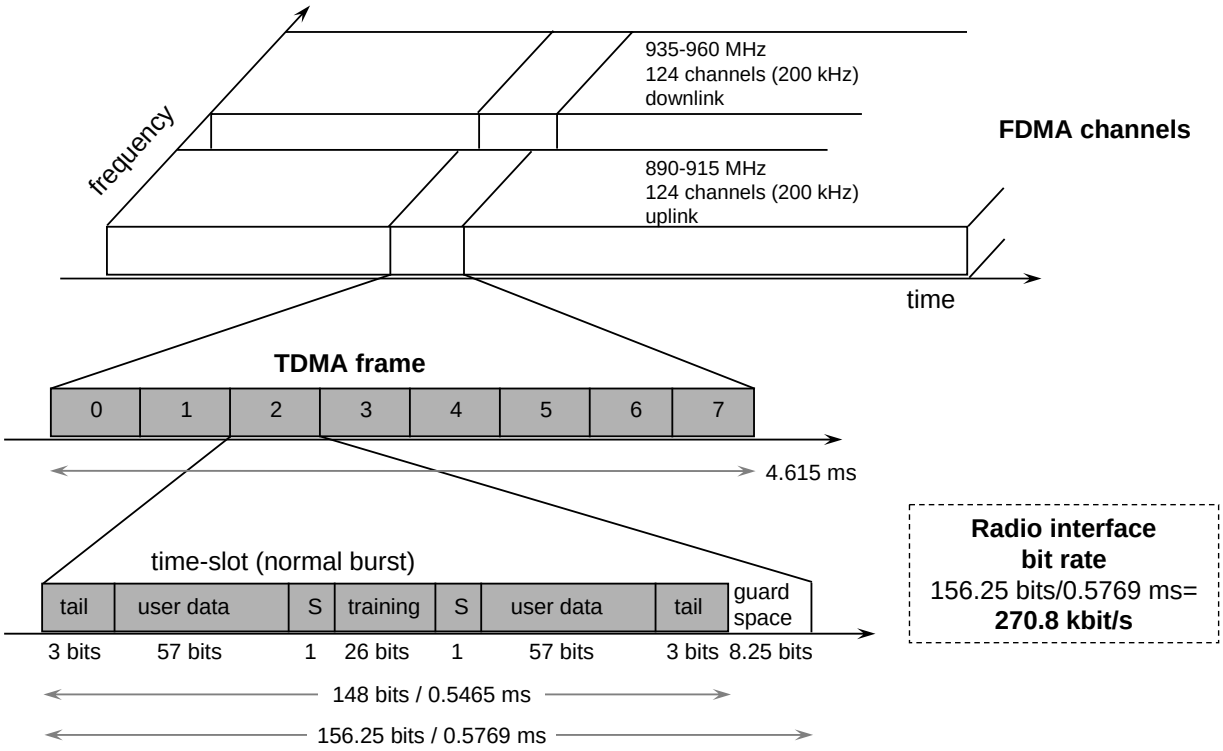


**Radio interface bit rate**
156.25 bits/0.5769 ms=
**270.8 kbit/s**



# Burst structures

- Normal Burst: normal data transmission

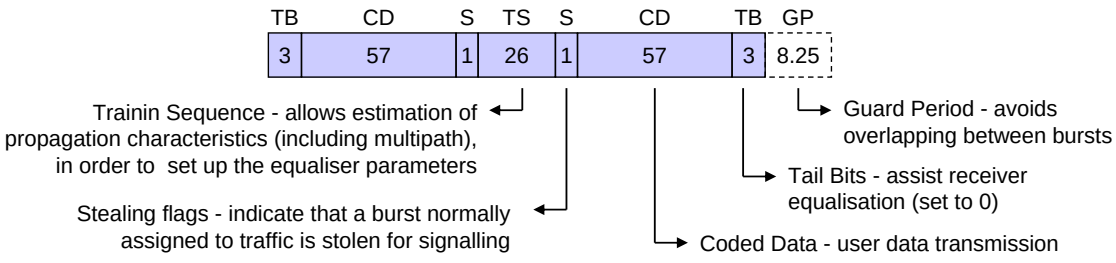


- Access Burst: MS first time access

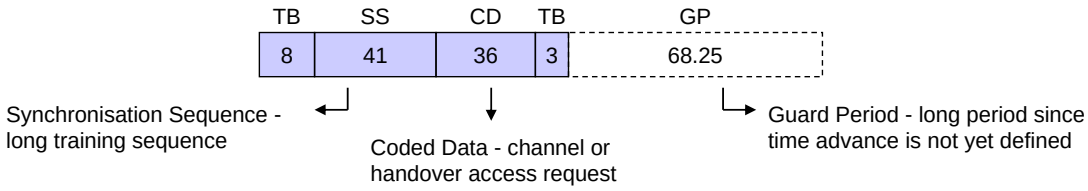

# Burst structures

- Frequency Correction Burst: frequency synchronisation of the MS

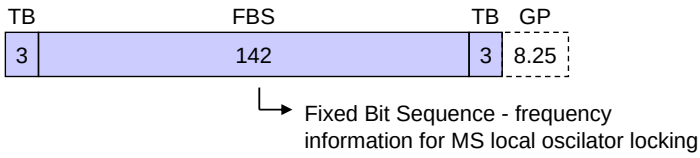


- Synchronisation Burst: time synchronisation of the MS

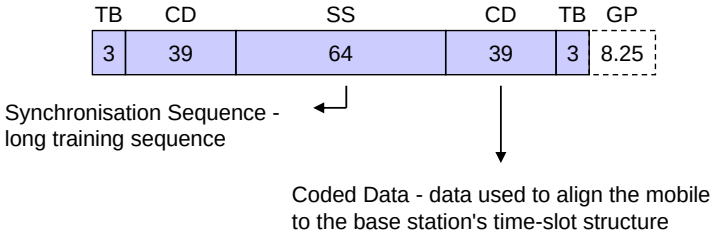




# Frame hierarchy

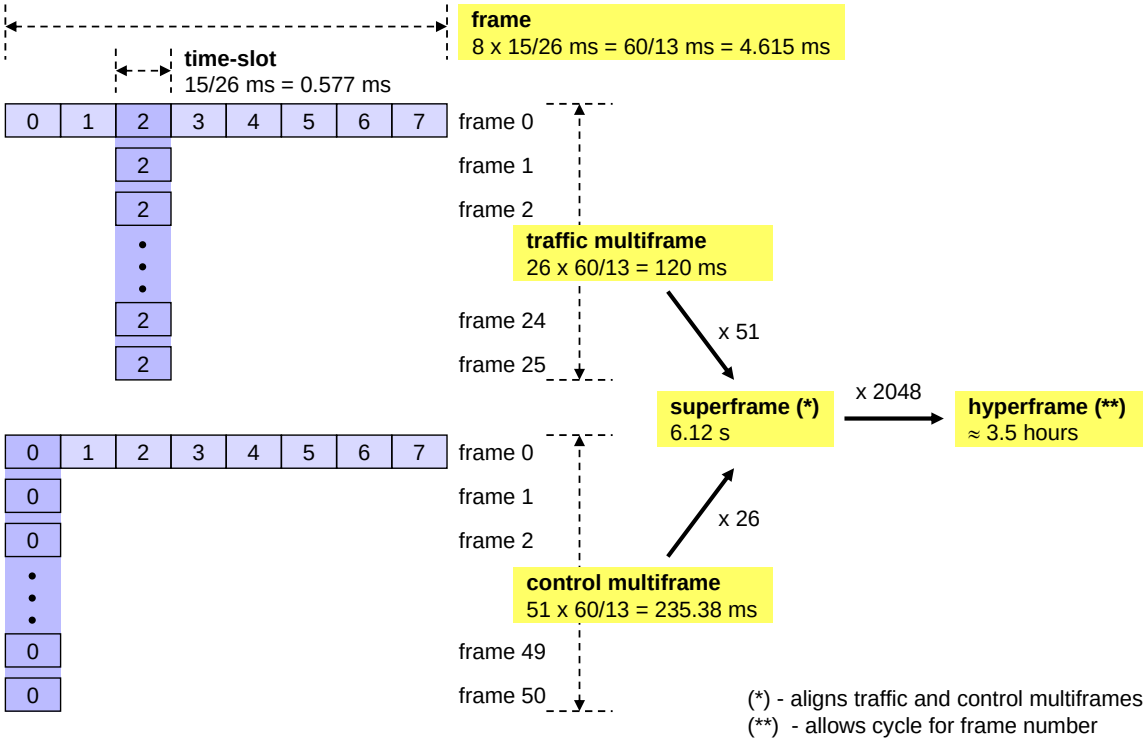

# Logical channels

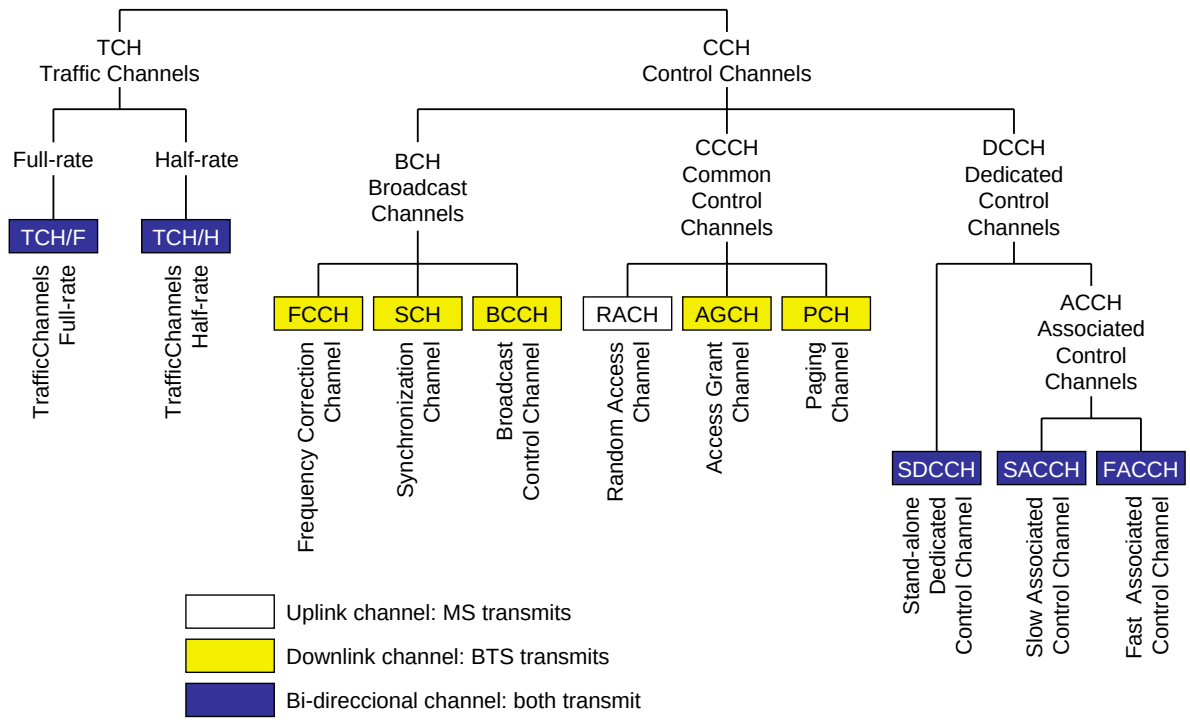




# Logical channels

| Channel | | Direction | Application | Allocation |
|---|---|---|---|---|
| TCH Traffic Channels | TCH/H | BTS ↔ MS | User data | Allocated by network on demand by MS |
| | TCH/F | | | |
| BCH Broadcast Channels | FCCH | BTS → MS | Carrier synchronization | Permanent |
| | SCH | | Frame synchronisation | |
| | BCCH | | General network information<br>Cell information (present and adjacent) | |
| CCCH Common Control Channels | RACH | BTS ← MS | Request SDCCH for signalling<br>Request TCH for handover | Multiple access with slotted Alhoa contention between MS |
| | AGCH | BTS → MS | Confirmation of SDCCH or TCH request | Permanent |
| | PCH | | Allert MS to a call originated in the network | |
| DCCH Dedicated Control Channels | SDCCH | BTS ↔ MS | Registration / location updating<br>Call control procedures | Allocated by network on demand |
| | SACCH | | Control information between MS and BTS during the progress of a call or call set up | Associated to a specific TCH or SDCCH |
| | FACCH | | Exchange of time critical control information during the progress of a call | Allocated by network or MS (*) |

(*) Fast allocation by setting S bit; bits are stolen from TCH

# Logical channels

| Channel | | Burst type | Time-slot | Mulitiframe | Bursts / Multiframe | Capacity |
|---|---|---|---|---|---|---|
| TCH Traffic Channels | TCH/H | Normal (114 data bits) | Any | 26 frames (120 ms) | 24 | 24 x 114 / 120 = 22.8 kbit/s |
| | TCH/F | | | | 12 | 12 x 114 / 120 = 11.4 kbit/s |
| BCH Broadcast Channels | FCCH | Frequency correction | TS0 - base channel (*) TS0/TS2/TS4/TS6 (**) | 51 frames (235.38 ms) | 5 | |
| | SCH | Synchronisation | | | 5 | |
| | BCCH | Normal (114 data bits) | | | 4 | 4 x 114 / 235.38 = 1.94 kbit/s |
| CCCH Common Control Channels | RACH | Random access | TS0 - base channel (*) TS2/TS4/TS6 (**) | 51 frames (235.38 ms) | 27 minimum 51 typical | |
| | AGCH | Normal (114 data bits) | | | 12 minimum | 12 x 114 / 235.38 = 5.81 kbit/s minimum |
| | PCH | | | | | |
| DCCH Dedicated Control Channels | SDCCH | Normal (114 data bits) | TS0 - base channel (*) TS0/TS2/TS4/TS6 (**) | 51 frames (235.38 ms) | 4 | 4 x 114 / 120 = 3.8 kbit/s |
| | SACCH | | Same TS as SDCCH | | 2 (***) | 2 x 114 / 120 = 1.9 kbit/s |
| | | | Same TS as TCH | 26 frames (120 ms) | 1 | 1 x 114 / 120 = 0.95 kbit/s |
| | FACCH | | Same TS as TCH (bits stolen from TCH) | | Same as TCH | Same as TCH |

(*) Low capacity cells
(**) High capacity cells
(***) 4 bursts in 2 multiframes equivalent to 2 bursts/ multiframe



# Transmission / reception timing

- Transmit / receive frame staggering
  - to simplify hardware design, transmitter and receiver never operate at the same time
  - transmission is half-duplex
  - the numbering scheme is staggered by 3 time-slots

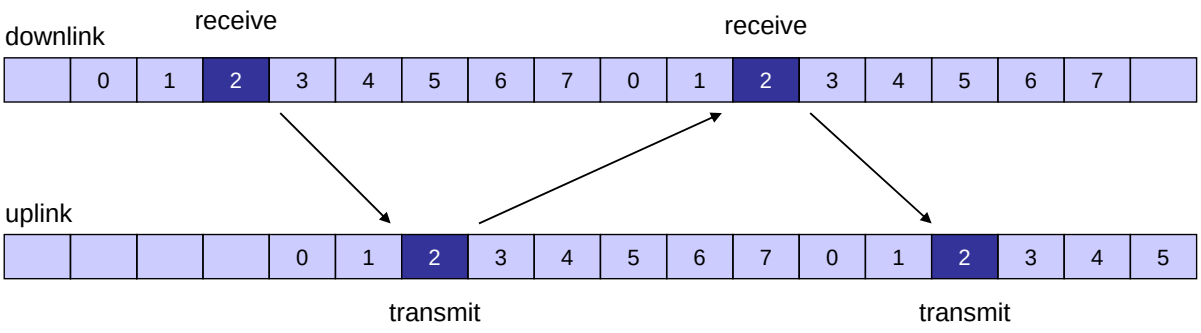

## Transmission / reception timing

- Transmit time advance
  - Principle of operation
    - correct timing of uplink bursts at the BTS is required to avoid overlapping
    - different path delays (MS-BTS distances) must be compensated
    - transmission from the MS is advanced 0-63 bits under BTS control
    - maximum time advance of 63 bits allows 0.233 ms round trip delay
    - maximum cell radius is approximately 35 km
  - Initial ranging
    - Access Burst is transmitted without time advance
    - Guard Period of 68.25 bits allows for a path delay due to 37 km distance
    - BTS measures path delay and sends required time advance on SACCH
    - MS introduces time advance on all bursts
  - Adaptive control
    - BTS monitors burst and measures delays with specified time advance
    - if path delay varies more than 1 bit period, the new value is signalled on SACCH



## Frequency hopping

- Application of frequency hoping
  - optional, but usually implemented
  - channels with no frequency hopping: BCH and CCCH
- Hoping sequence
  - several possible hoping algorithms
  - selected algorithm broadcast on BCCH
- Slow frequency hopping characteristics
  - in a given time-slot, successive TDMA frame are transmitted on different carriers
  - main hoping parameters
    - period: 4.615 ms
    - frequency: 217 hops/s
    - number of bits: 1250 bits/hop

# Transmission power

- Mobile station power classes

| GSM 900 | | | GSM 1800 | | |
|---|---|---|---|---|---|
| 8 W | 39 dBm | vehicular | 4 W | 36 dBm | vehicular |
| 5 W | 37 dBm | portable | 1 W | 30 dBm | portable |
| 2 W | 33 dBm | portable | 0.25 W | 24 dBm | portable |
| 0.8 W | 29 dBm | portable | | | |

usual classes

- Discontinuous transmission (DTX) for voice
  - no data transmission during periods of silence (approx. 60% of time)
    - Voice Activity Detector (VAD) algorithm suppresses TCH transmission
  - silent frames are sent to synthesise comfort noise at the receiver
  - several advantages
    - reduces interference, on average, by 3 dB
    - Increases MS battery life



# Transmission power

- Power control
  - implemented on both links
  - objective: lowest power level which provides desired quality (BER)
  - procedure
    - MS measures power received and BER and sends result on SACCH
    - BTS sends new power level on SACCH, if and when necessary
  - control range

| GSM 900 | GSM 1800 | Comments |
|---|---|---|
| 5 - 39 dBm | 0 - 36 dBm | effective maxima depend on cell size and MS capability<br>control steps of 2 dB |

  - channels with no power control - use maximum power for the cell
    - downlink BCH and CCCH: power set by BTS
    - uplink RACH
      - BCCH broadcasts maximum power level for the cell
      - MS uses this value to set RACH transmission power

# Security in GSM

- Security services
  - access control/authentication
    - user ➔ SIM (Subscriber Identity Module): secret PIN (Personal Identification Number)
    - SIM ➔ network: challenge - response method
  - confidentiality
    - voice and signaling encrypted on the wireless link (after successful authentication)
  - anonymity
    - TMSI - Temporary Mobile Subscriber Identity
    - newly assigned at each new location update
    - encrypted transmission
- 3 algorithms specified in GSM
  - A3 for authentication ("secret", open interface)
  - A5 for encryption (standardized)
  - A8 for encryption key generation ("secret", open interface)

"secret":
• A3 and A8 available via the Internet
• network providers can use stronger mechanisms



# GSM - authentication

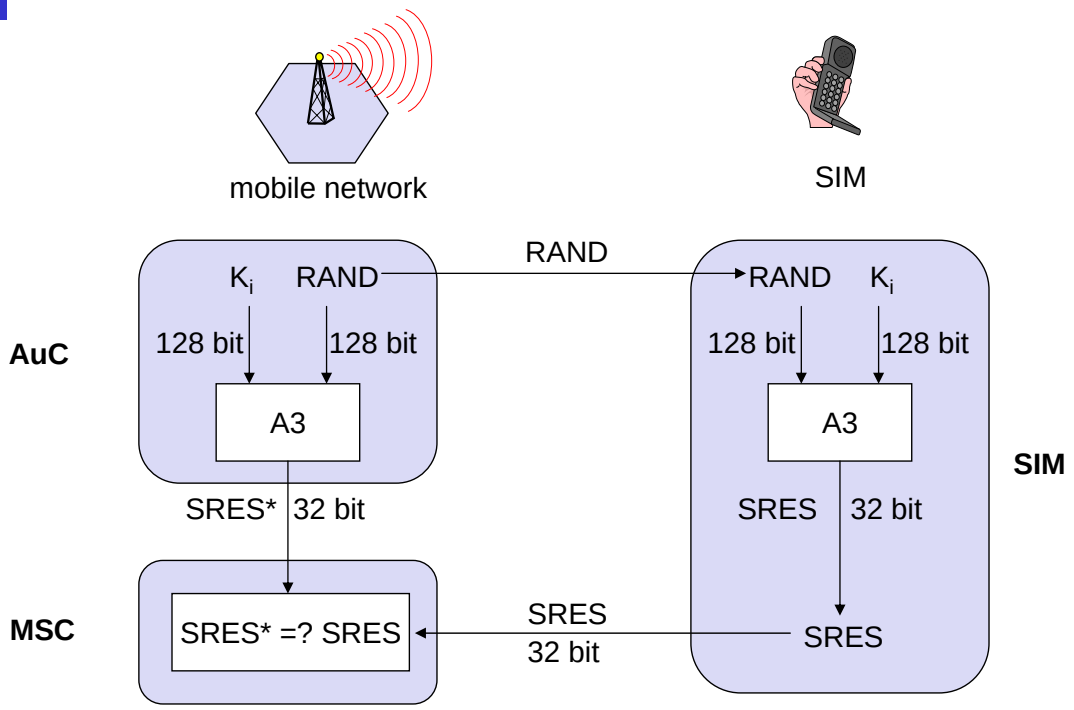


$K_i$: individual subscriber authentication key SRES: signed response

# GSM - key generation and encryption

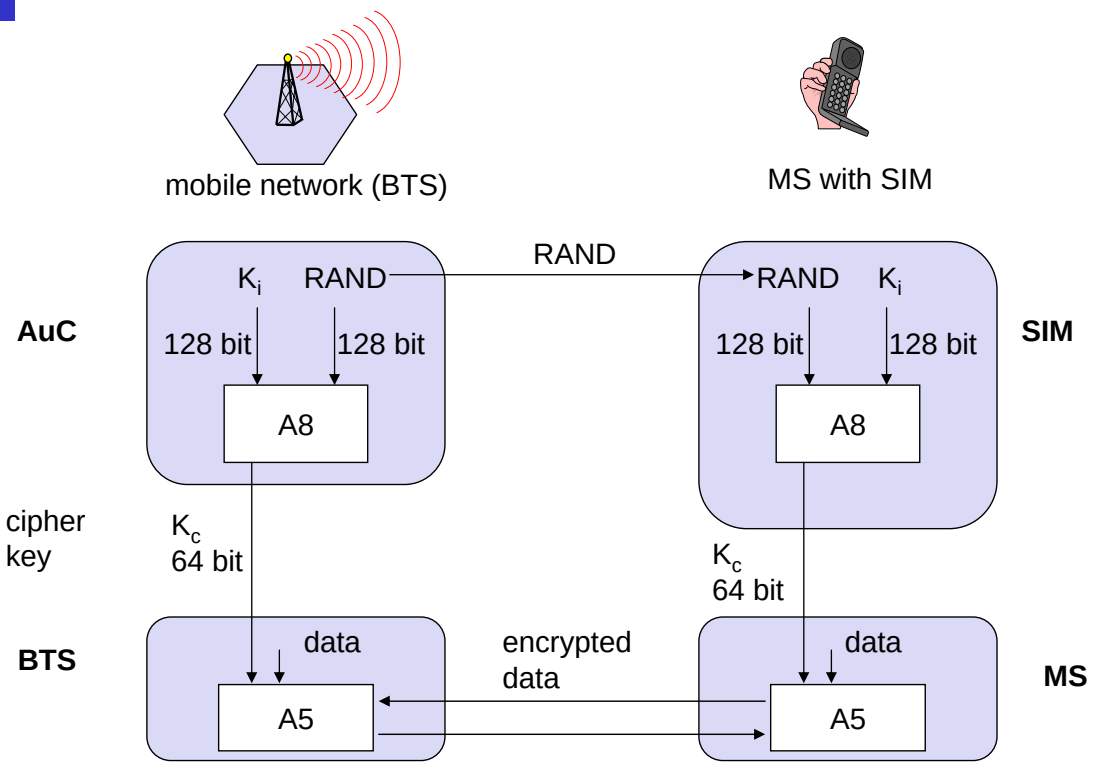




# GSM protocol layers for signaling

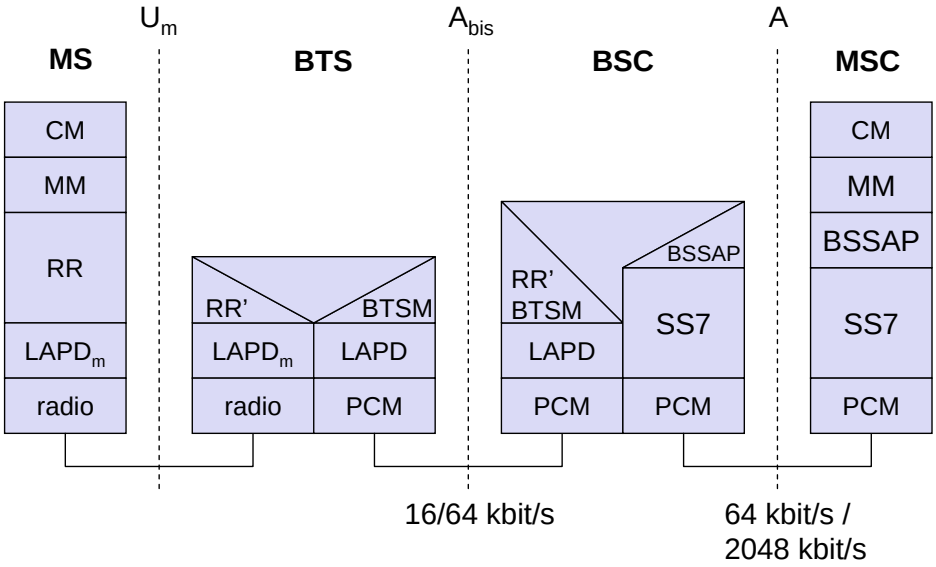

## GSM protocol layers for signaling

- CM (Connection Management)
  - call control, short message service and supplementary service
- MM (Mobility Management)
  - registration, authentication, location and handover management
- RR (Radio Resource Management)
  - setup, maintenance and release of radio channels
  - control of radio transmission quality
- LAPDm ("Link Access Protocol D-channel" modified)
  - modified version of ISDN LAPD protocol
- BTSM (Base Transceiver Station Management)
  - radio resources control messages between BSC and BTS
- BSSAP (Base Station System Application Part)
  - control of BSC by MSC



## Mobile Terminated Call

1: calling a GSM subscriber

2: forwarding call to GMSC

3: signal call setup to HLR

4, 5: get routing info (MSRN) from VLR

6: forward routing info to GMSC

7: route call to current MSC

8, 9: get current status of MS (LAI + TMSI)

10, 11: paging of MS in location area

12, 13: MS answers paging and authentication request

14, 15: security checks

16, 17: set up connection

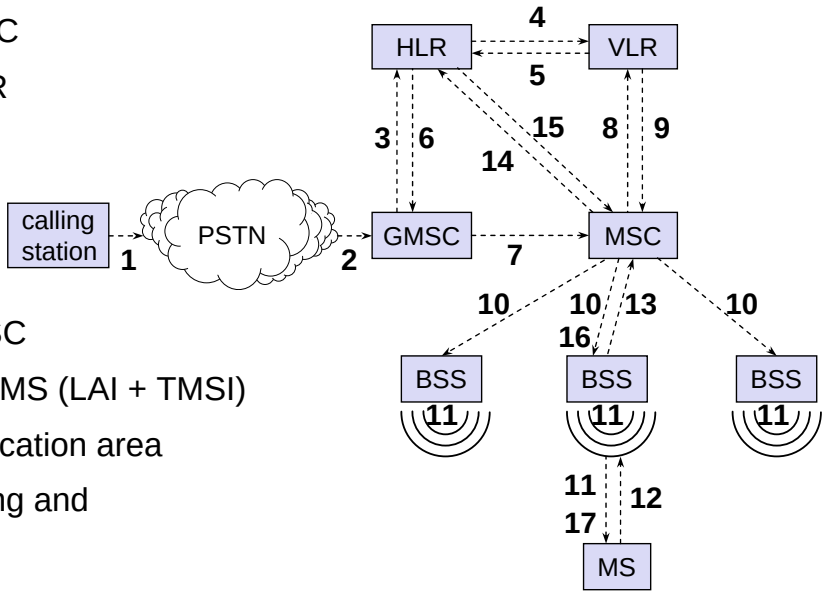

# Mobile Terminated Call

- Channel activity at radio interface

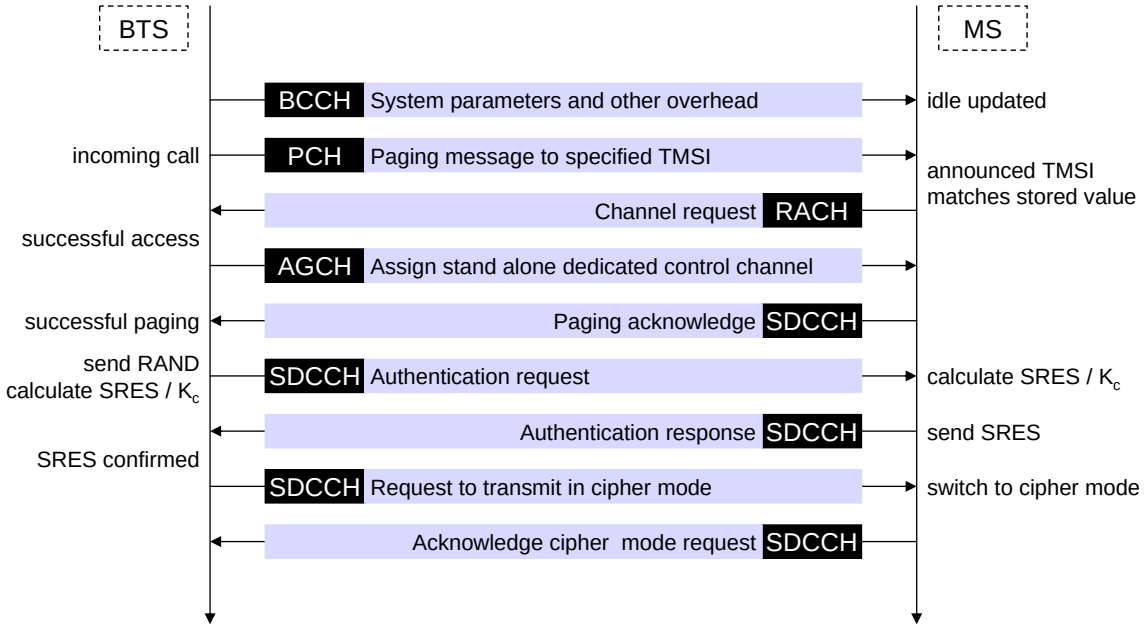




# Mobile Terminated Call

- Channel activity at radio interface (cont.)

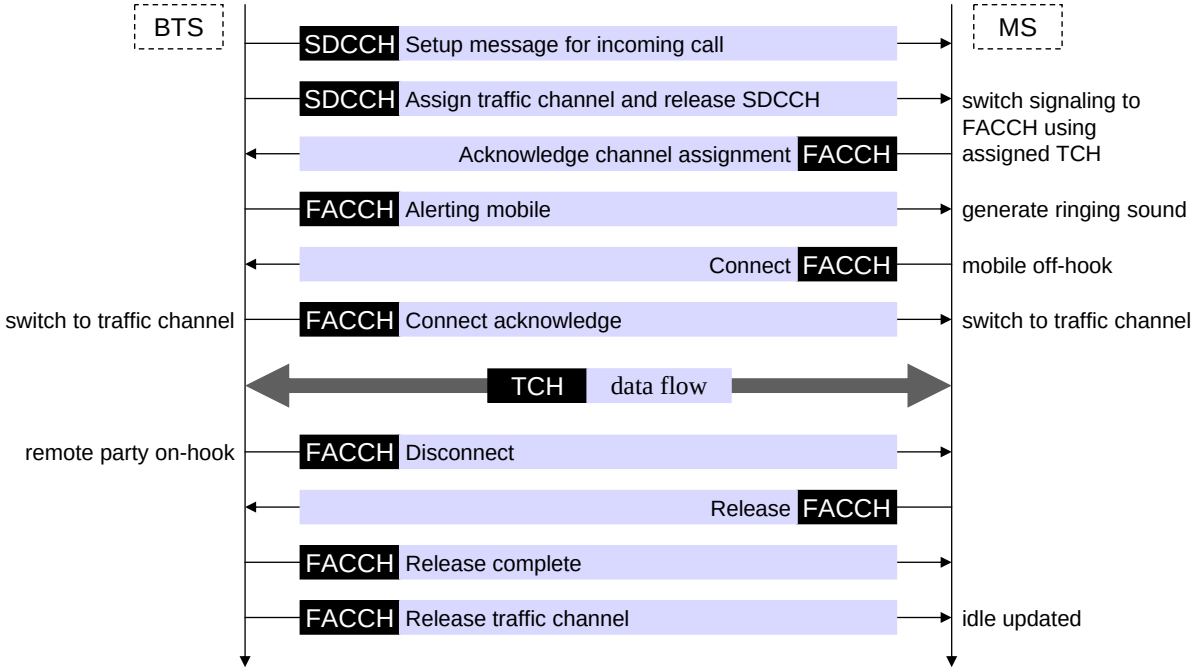

# Mobile Originated Call

1, 2: connection and authentication request

3, 4: security check

5-8: check resources (free circuit)

9-10: set up call

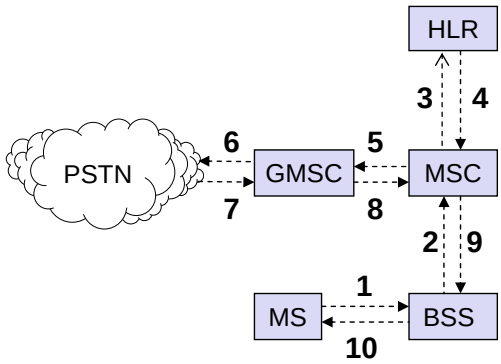




# Mobile Originated Call

- Channel activity at radio interface

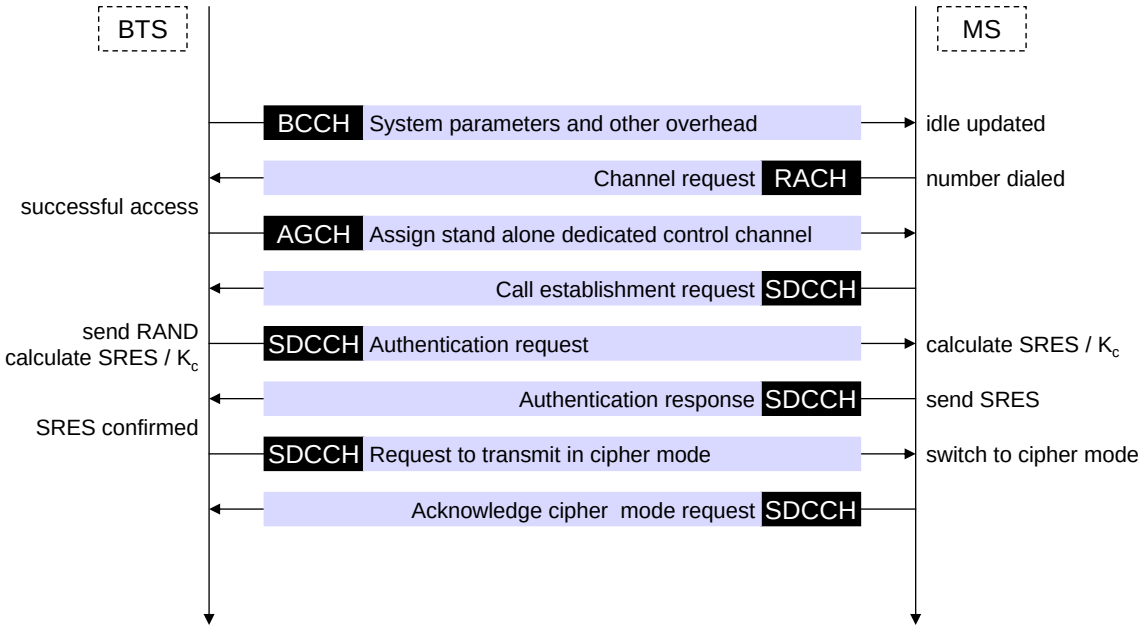

# Mobile Originated Call

- Channel activity at radio interface

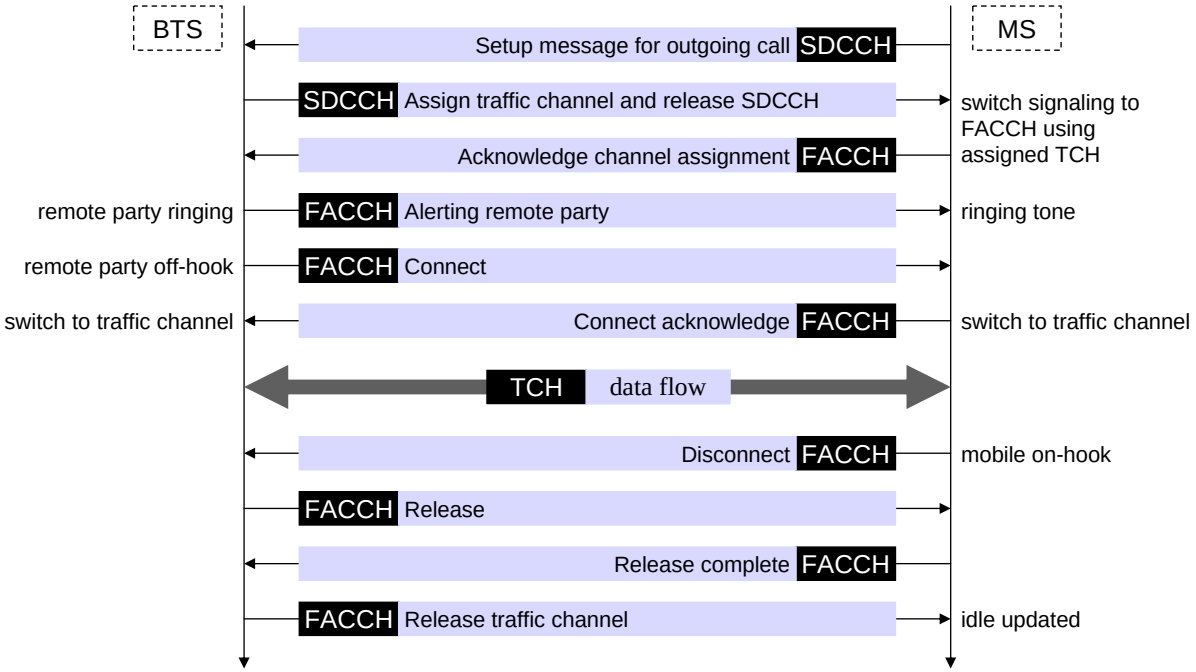




# 4 types of handover

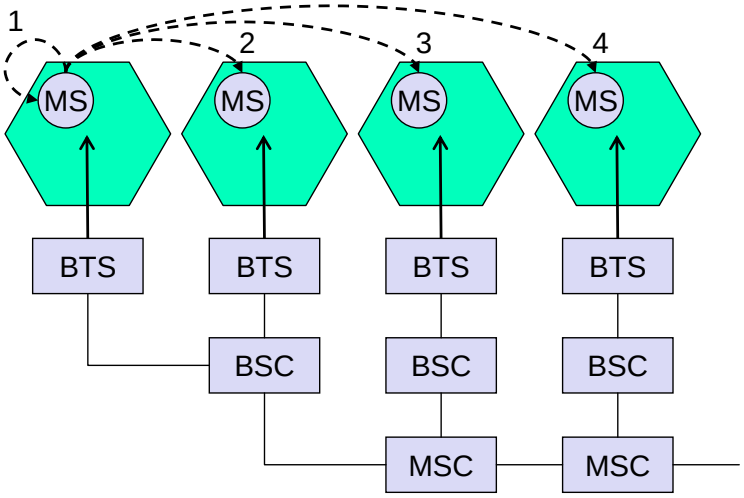


1 - between different sectors of the same cell
2 - between different cells within the same BSC domain
3 - between different BSC domains within the same MSC domain
4 - between different MSC domains

# Handover decision

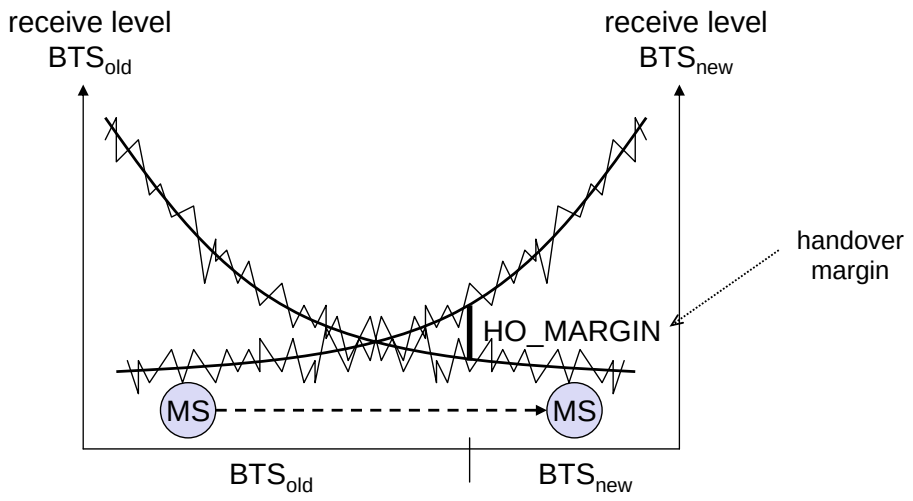




# Mobile-Assisted Handover (MAHO)

*MS scans, measures and reports power received from several RF carrier based on BCCH information*

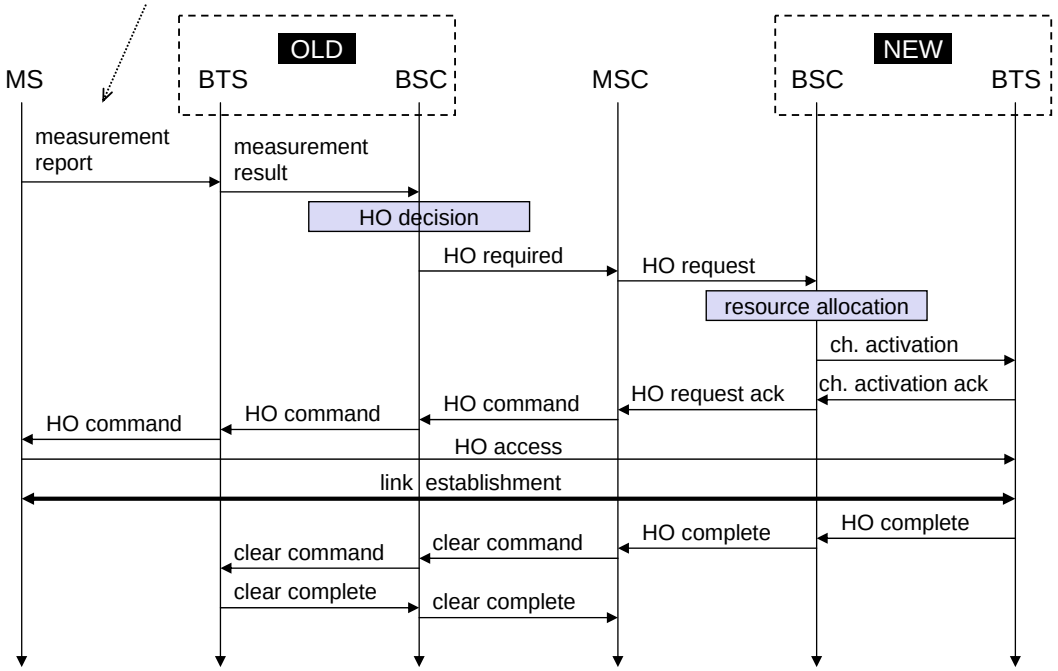

# Location update

- MS is aware of location
  - BTS broadcasts Location Area Identification (LAI) on BCCH
  - SIM stores current LAI and TMSI

- Events which determine a current location update
  - MS is switched on and current LAI equals stored LAI
  - a timer set by the network expires and MS reports position

    ↳ TMSI may be updated and stored in SIM

- Events which determine a new location update
  - MS is switched on and current LAI differs from stored LAI
  - MS enters a new location area

    ↳ TMSI and LAI are updated and stored in SIM



# Location update

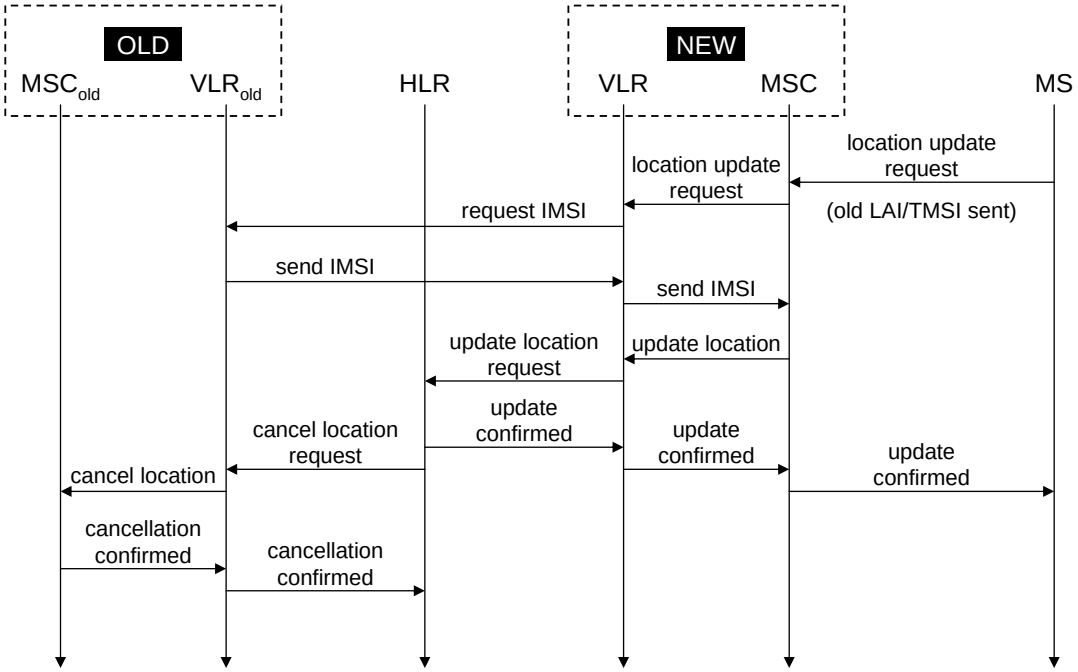

# Location update

- Channel activity at radio interface